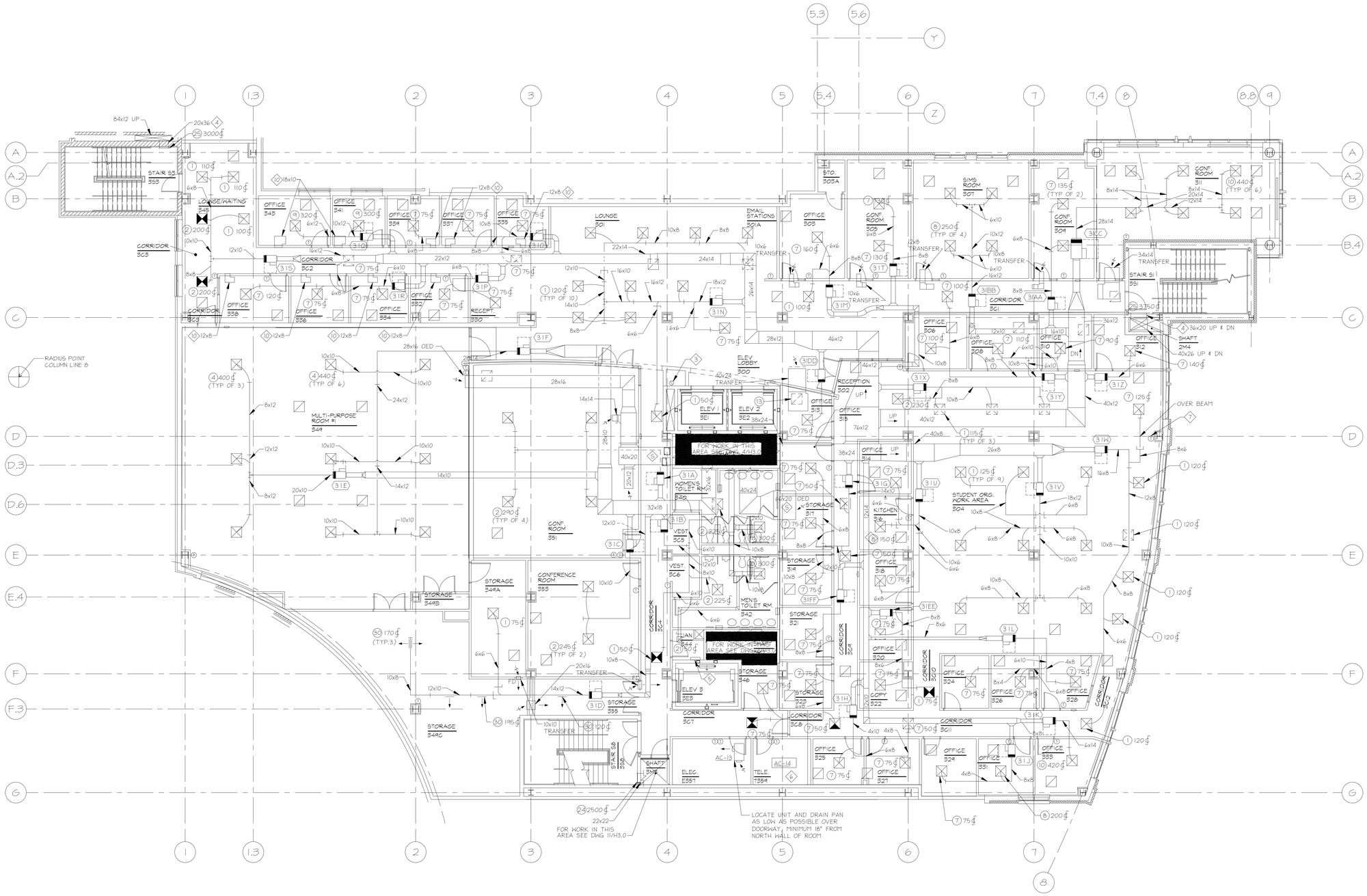

1 DUCTWORK - THIRD FLOOR
1/8"=1'-0"

DRAWING NOTES:

1. ALL OPEN END DUCTS SHALL BE PROVIDED WITH BELLMOUTH PER DETAIL.
2. ALL TRANSFER DUCTS SHALL BE LINED WITH 1"S.L.

◇ SPECIAL NOTES:

1 NOT USED.

2 NOT USED.

3 10"Φ OD TYPE L FLUE VENT UP & DN. COORD LOCATION WITH PLUMBING RISERS IN SHAFT.

4 LOCATE AS HIGH AS POSSIBLE.

5 ATC PANEL.

6 SEE DWG. H3.5 FOR DUCTWORK.

7 CONTROL UNITS 31W AND 31V IN PARALLEL.

8 NOT USED.

9 NOT USED.

10 TRANFER DUCT MOUNTED HIGH, WITH 1" SOUND LINING.

RECORD DRAWING: This record drawing has been prepared based upon information provided by others. While this information is believed to be reliable, the Design Professional has not verified its accuracy, and thus is not responsible for the accuracy or completeness of this record drawing or for any errors or omissions which may have been incorporated into it as a result of erroneous information provided by others. Those relying on this record document are advised to obtain independent verification of its accuracy before applying it for any purpose.

IF THIS DRAWING DOES NOT MEASURE EXACTLY 30" X 42", IT HAS BEEN REDUCED OR ENLARGED. PLEASE DO NOT SCALE THIS DRAWING.

WTW ARCHITECTS
TIMBER COURT
127 ANDERSON STREET
PITTSBURGH, PA 15212-5801
(412) 321-0550
(412) 321-2431 FAX

ASSOCIATE ARCHITECT:

WBCM, – Architects
Whitney Bailey Cox & Magnani, LLC –
Consulting Engineers
849 Fairmount Ave. Suite 100
Baltimore, MD 21286 (410) 512-4500

Henry Adams, LLC.
Consulting Engineers
600 Baltimore Avenue
Baltimore, MD 21204-4079
410.296.6500
Fax 410.296.3156

Mullins Engineering Co.
1257 ANNAPOLIS ROAD,
ODENTON, MD 21113
410-519-0800
FAX: 410-672-3977

MEC PROJECT NO. 0512300

Rev.	Date:	Comment:
20	1/29/10	RECORD DRAWING
19	8/4/09	BULLETIN #120
18	4/29/09	BULLETIN #109
17	4/30/09	BULLETIN #108R
16	3/30/09	BULLETIN #105
15	4/15/09	BULLETIN #99R
14	3/2/09	BULLETIN #94
13	12/16/08	BULLETIN #82
12	12/7/08	BULLETIN #80
11	11/20/08	BULLETIN #78
10	11/19/08	BULLETIN #72 (rev)
9	10/20/08	BULLETIN #69
8	9/4/08	BULLETIN #63
7	7/28/08	BULLETIN #55
6	6/23/08	BULLETIN #51
5	05/23/08	COORD. DWGS RFI 163
4	05/09/08	BULLETIN #31
3	04/14/08	CB-39
2	03/10/08	CBM-2
1	02/18/08	CBM-1
0	05/02/07	For Construction

Issued: May 2, 2007

Campus Center

621 West Lombard Street
University of Maryland, Baltimore
Baltimore, MD

Ductwork Third Floor

100% CONSTRUCTION DOCUMENTS

UMB PROJECT NO. 99-311
WTW PROJECT NO. 70-4091
© WTW ARCHITECTS ${extlim#E'O# yyyy}

H1.3

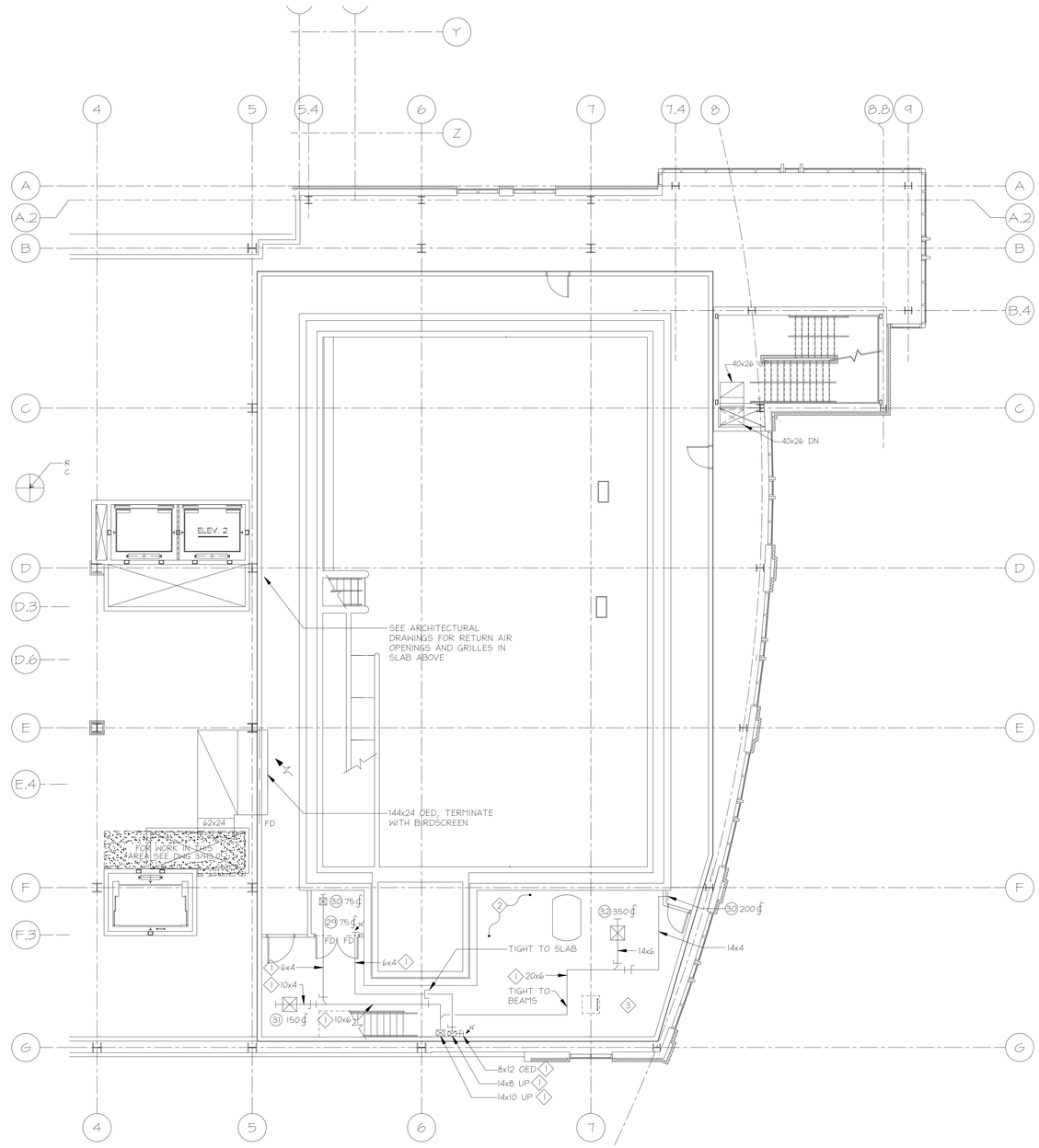

2 HVAC DUCTWORK - PART FOURTH FLOOR - INTERSTITIAL SPACE
1/8"=1'-0"

0 4' 8' 16'

N

DRAWING NOTES:

1. ALL OPEN END DUCTS SHALL BE PROVIDED WITH BELLMOUTH PER DETAIL.

SPECIAL NOTES:

1. ALUMINUM DUCTWORK.
2. DUCT INSULATION NOT REQUIRED IN THIS SPACE.
3. ALL AIR DEVICES AT THIS LEVEL SHALL BE ALUMINUM CONSTRUCTION.

IF THIS DRAWING DOES NOT MEASURE EXACTLY 30" X 42", IT HAS BEEN REDUCED OR ENLARGED. PLEASE DO NOT SCALE THIS DRAWING.

WTW ARCHITECTS
TIMBER COURT
127 ANDERSON STREET
PITTSBURGH, PA 15212-5801
(412) 321-0550
(412) 321-2431 FAX

ASSOCIATE ARCHITECT:

WBCM, – Architects
Whitney Bailey Cox & Magnani, LLC – Consulting Engineers
849 Fairmount Ave. Suite 100
Baltimore, MD 21286 (410) 512-4500

Henry Adams, LLC.
Consulting Engineers
600 Baltimore Avenue
Baltimore, MD 21204-4079
410.296.6500
Fax 410.296.3156

Mullins Engineering Co.
1257 ANNAPOLIS ROAD,
ODENTON, MD 21113
410-519-0800
FAX: 410-672-3977

MEC PROJECT NO. 0512300

Rev.	Date:	Comment:
20	1/29/10	RECORD DRAWING
19	8/4/09	BULLETIN #120
18	4/29/09	BULLETIN #109
17	4/30/09	BULLETIN #108R
16	3/30/09	BULLETIN #105
15	4/15/09	BULLETIN #99R
14	3/2/09	BULLETIN #94
13	12/16/08	BULLETIN #82
12	12/7/08	BULLETIN #80
11	11/20/08	BULLETIN #78
10	11/19/08	BULLETIN #72 (rev)
9	10/20/08	BULLETIN #69
8	9/4/08	BULLETIN #63
7	7/28/08	BULLETIN #55
6	6/23/08	BULLETIN #51
5	05/23/08	COORD. DWGS RFI 163
4	05/09/08	BULLETIN #31
3	04/14/08	CB-39
2	03/10/08	CBM-2
1	02/18/08	CBM-1
0	05/02/07	For Construction

Issued: May 2, 2007

Campus Center

621 West Lombard Street
University of Maryland, Baltimore
Baltimore, MD

Ductwork Lower Pool Level

100% CONSTRUCTION DOCUMENTS

UMB PROJECT NO. 99-311
WTW PROJECT NO. 70-4091

H1.3A

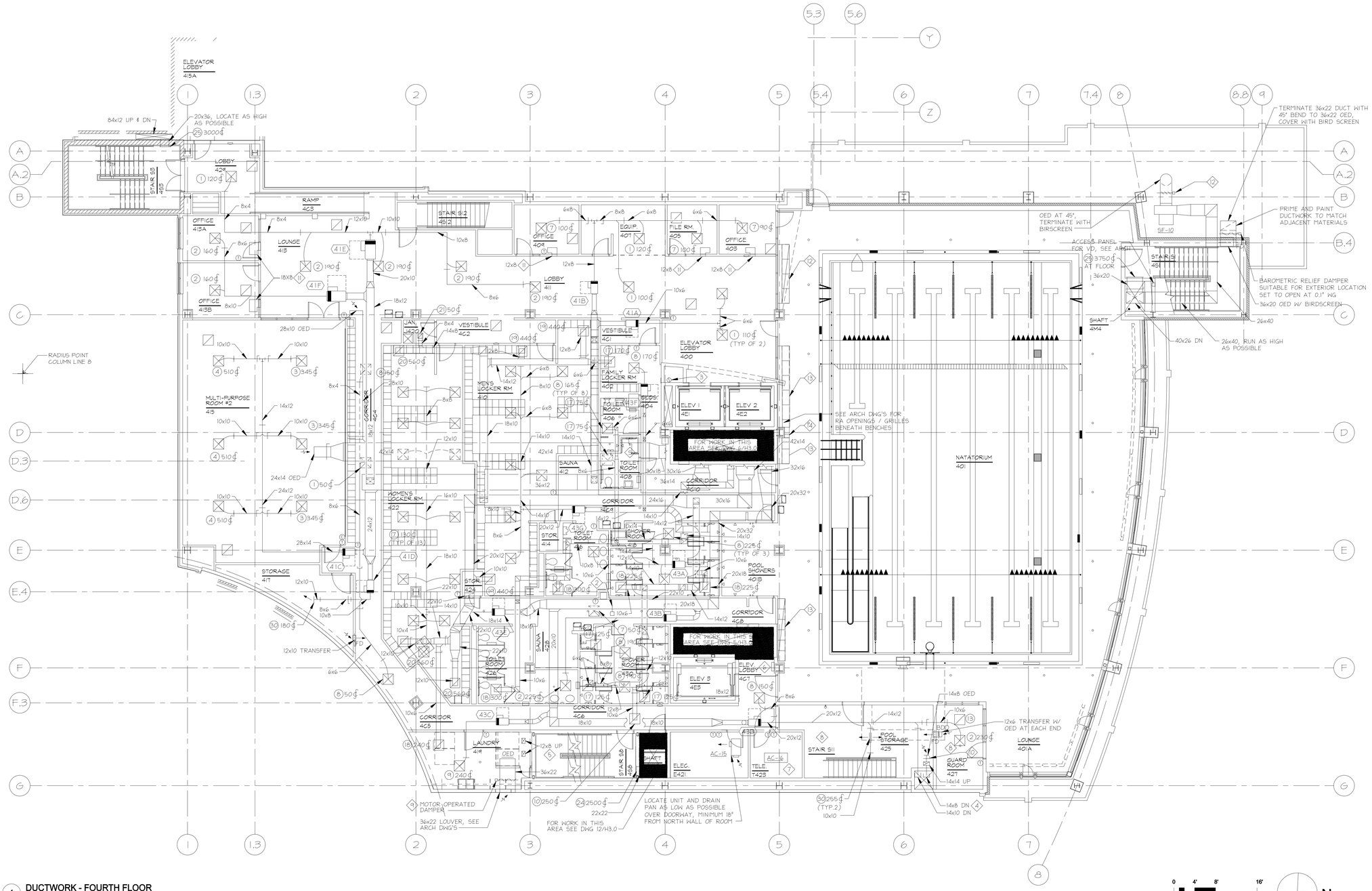

1 DUCTWORK - FOURTH FLOOR
1/8"=1'-0"

DRAWING NOTES:

1. ALL OPEN END DUCTS SHALL BE PROVIDED WITH BELLMOUTH PER DETAIL.

◇ SPECIAL NOTES:

1 NOT USED.

2 NOT USED.

3 10"ϕ OD TYPE L FLUE VENT UP & DN. COORD LOCATION WITH PLUMBING RISERS IN SHAFT.

4 ALUMINUM DUCTWORK.

5 TRANSITION DOWN TO DRYER EXHAUST CONNECTION (DRYERS PROVIDED BY OWNER).

6 ATC PANEL

7 SEE DWG. H3.5 FOR DETAILED LAYOUT.

8 ALL AIR DEVICES AND DUCTWORK IN THIS ROOM SHALL BE ALUMINUM CONSTRUCTION.

9 INTERLOCK WITH DRYERS SUCH THAT DAMPER OPENS WHENEVER ANY DRYER IS TURNED ON.

10 BALANCE FOR 810 CFM.

11 TRANSFER AIR DUCT MOUNTED HIGH, WITH 1" SOUND LINING.

12 LOW-LEAKAGE PARALLEL BLADE DAMPER WITH 24 VDC ACTUATOR, FOR CONNECTION TO AND CONTROL BY FIRE ALARM SYSTEM. DAMPER AND ACTUATOR SHALL BE SUITABLE FOR EXTERIOR INSTALLATION. DAMPER SHALL BE INTERLOCKED WITH FAN SUCH THAT WHEN IT IS OPERATING, DAMPER IS OPEN.

13 PROVIDE RUSKIN MODEL IBD2 OR EQUAL FIRE DAMPER IN FLOOR OPENING UNDER BENCH. DAMPER SHALL BE 1.5 HR RATED, STYLE A TYPE, MANUFACTURED IN ACCORDANCE WITH UL555 WITH STAINLESS STEEL MATERIALS. FUSIBLE LINK SHALL BE 165F SETPOINT.

14 BLANK OFF FLOOR OPENING UNDER BENCH AT BEAM, TO MEET 2-HOUR RATING OF FLOOR.

IF THIS DRAWING DOES NOT MEASURE EXACTLY 30" x 42", IT HAS BEEN REDUCED OR ENLARGED. PLEASE DO NOT SCALE THIS DRAWING.

WTW ARCHITECTS
TIMBER COURT
127 ANDERSON STREET
PITTSBURGH, PA 15212-5801
(412) 321-0550
(412) 321-2431 FAX

ASSOCIATE ARCHITECT:
WBCM, – Architects
Whitney Bailey Cox & Magnani, LLC –
Consulting Engineers
849 Fairmount Ave. Suite 100
Baltimore, MD 21286 (410) 512-4500

Henry Adams, LLC.
Consulting Engineers
600 Baltimore Avenue
Baltimore, MD 21204-4079
410.296.6500
Fax 410.296.3156

Mullins Engineering Co.
1257 ANNAPOLIS ROAD,
ODENTON, MD 21113
410-519-0800
FAX: 410-672-3977

MEC PROJECT NO. 0512300

Rev.	Date:	Comment:
20	1/29/10	RECORD DRAWING
19	8/4/09	BULLETIN #120
18	4/29/09	BULLETIN #109
17	4/30/09	BULLETIN #108R
16	3/30/09	BULLETIN #105
15	4/15/09	BULLETIN #99R
14	3/2/09	BULLETIN #94
13	12/16/08	BULLETIN #82
12	12/7/08	BULLETIN #80
11	11/20/08	BULLETIN #78
10	11/19/08	BULLETIN #72 (rev)
9	10/20/08	BULLETIN #69
8	9/4/08	BULLETIN #63
7	7/28/08	BULLETIN #55
6	6/23/08	BULLETIN #51
5	05/23/08	COORD. DWGS RFI 163
4	05/09/08	BULLETIN #31
3	04/14/08	CB-39
2	03/10/08	CBM-2
1	02/18/08	CBM-1
0	05/02/07	For Construction

Issued: May 2, 2007

Campus Center

621 West Lombard Street
University of Maryland, Baltimore
Baltimore, MD

Ductwork Fourth Floor

100% CONSTRUCTION DOCUMENTS

UMB PROJECT NO. 99-311
WTW PROJECT NO. 70-4091

H1.4

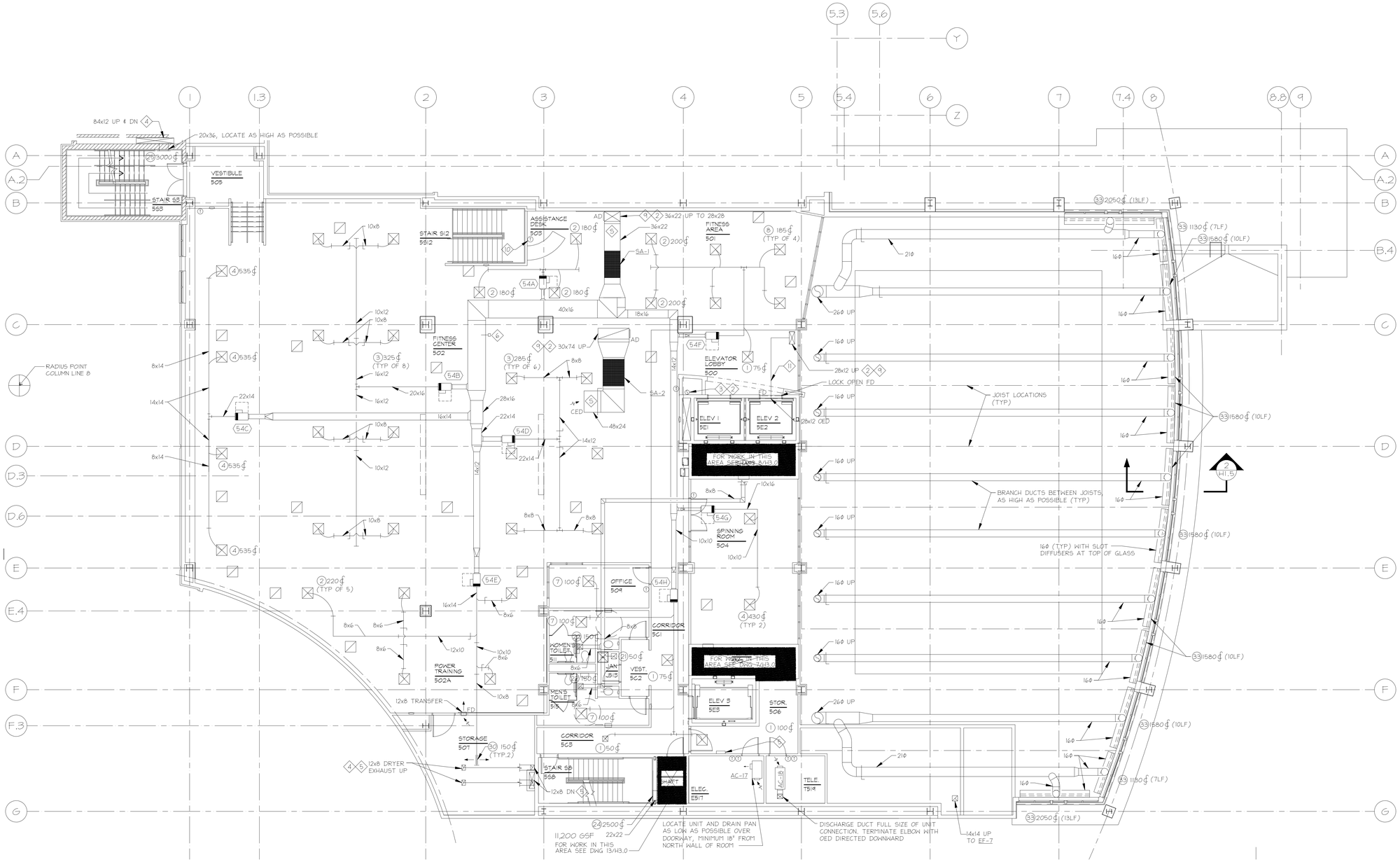

1 DUCTWORK - FIFTH FLOOR
1/8"=1'-0"

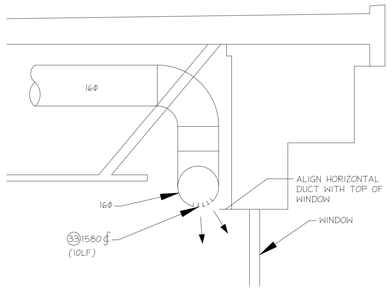

2 SECTION/H1.5
1/2"=1'-0"

DRAWING NOTES:

1. ALL OPEN END DUCTS SHALL BE PROVIDED WITH BELLMOUTH PER DETAIL.

◇ SPECIAL NOTES:

1 ADJUST THERMOSTAT SET POINT.

2 FOR CONTINUATION SEE DRAWING H3.3.

3 10"ø OD TYPE L FLUE VENT UP & DN. COORD LOCATION WITH PLUMBING RISERS IN SHAFT.

4 FOR CONTINUATION UP, SEE DWG H2.6.

5 ELBOWS SHALL BE RADIUS TYPE. PROVIDE ACCESS PANELS FOR LINT CLEANOUT AT EACH ELBOW.

6 STATIC PRESSURE SENSOR. SEE ATC SCHEMATICS.

7 SEE DWG. H3.5 FOR FURTHER INFORMATION.

8 ATC PANEL.

9 LOCK OPEN FIRE DAMPER AT SLAB PENETRATION.

10 CONTROL UNITS 54D, 54A, 54B, AND 54E IN PARALLEL.

11 ENCLOSE DUCTWORK WITH 2-HR. RATED INSULATION AS SPECIFIED FOR GREASE EXHAUST DUCTWORK.

WTW ARCHITECTS
TIMBER COURT
127 ANDERSON STREET
PITTSBURGH, PA 15212-5801
(412) 321-0550
(412) 321-2431 FAX

ASSOCIATE ARCHITECT:
WBCM, – Architects
Whitney Bailey Cox & Magnani, LLC – Consulting Engineers
849 Fairmount Ave. Suite 100
Baltimore, MD 21286 (410) 512-4500

Henry Adams, LLC.
Consulting Engineers
600 Baltimore Avenue
Baltimore, MD 21204-4079
410.296.6500
Fax 410.296.3156

Mullins Engineering Co.
1257 ANNAPOLIS ROAD,
ODENTON, MD 21113
410-519-0800
FAX: 410-672-3977
MEC PROJECT NO. 0512300

Rev.	Date:	Comment:
20	1/29/10	RECORD DRAWING
19	8/4/09	BULLETIN #120
18	4/29/09	BULLETIN #109
17	4/30/09	BULLETIN #108R
16	3/30/09	BULLETIN #105
15	4/15/09	BULLETIN #99R
14	3/2/09	BULLETIN #94
13	12/16/08	BULLETIN #82
12	12/7/08	BULLETIN #80
11	11/20/08	BULLETIN #78
10	11/19/08	BULLETIN #72 (rev)
9	10/20/08	BULLETIN #69
8	9/4/08	BULLETIN #63
7	7/28/08	BULLETIN #55
6	6/23/08	BULLETIN #51
5	05/23/08	COORD. DWGS RFI 163
4	05/09/08	BULLETIN #31
3	04/14/08	CB-39
2	03/10/08	CBM-2
1	02/18/08	CBM-1
0	05/02/07	For Construction

Issued: May 2, 2007

Campus Center

621 West Lombard Street
University of Maryland, Baltimore
Baltimore, MD

Ductwork Fifth Floor

100% CONSTRUCTION DOCUMENTS

UMB PROJECT NO. 99-311
WTW PROJECT NO. 70-4091

H1.5

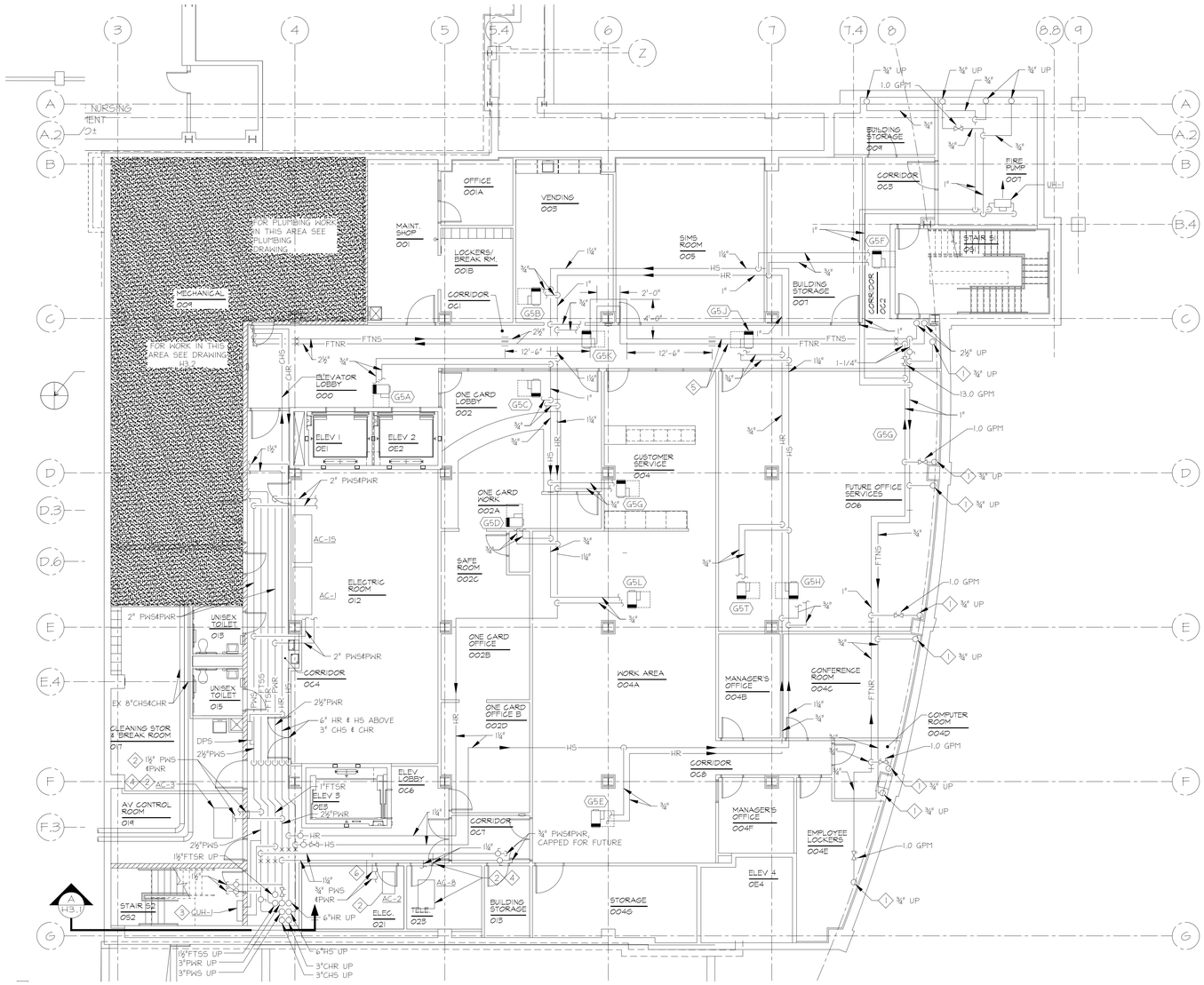

1 HVAC PIPING - GARDEN LEVEL
1/8"=1'-0"

0 4' 8' 16'

RECORD DRAWING: This record drawing has been prepared based upon information provided by others. While this information is believed to be reliable, the Design Professional has not verified its accuracy, and thus is not responsible for the accuracy or completeness of this record drawing or for any errors or omissions which may have been incorporated into it as a result of erroneous information provided by others. Those relying on this record document are advised to obtain independent verification of its accuracy before applying it for any purpose.

DRAWING NOTES:

1. SLAB PENETRATIONS OF FINNED TUBE SYSTEM PIPING SHALL BE BETWEEN BEAM AND WALL.

SPECIAL NOTES:

1. FOR CONTINUATION SEE H2-1.
2. PROVIDE DRAIN PAN UNDER PIPING AND UNIT.
3. ON LANDING, SEE SECTION.
4. SEE DWG. H3.5 FOR DETAILED LAYOUT.
5. ALL FINNED TUBE PIPING IN ORIGINAL SCOPE OF WORK.
6. COORDINATE PIPING TO MAINTAI CODE CLEARANCES WITHIN ELECTRICAL ROOM.

IF THIS DRAWING DOES NOT MEASURE EXACTLY 30" x 42", IT HAS BEEN REDUCED OR ENLARGED. PLEASE DO NOT SCALE THIS DRAWING.

WTW ARCHITECTS
TIMBER COURT
127 ANDERSON STREET
PITTSBURGH, PA 15212-5801
(412) 321-0550
(412) 321-2431 FAX

ASSOCIATE ARCHITECT:

WBCM, – Architects
Whitney Bailey Cox & Magnani, LLC –
Consulting Engineers
849 Fairmount Ave. Suite 100
Baltimore, MD 21286 (410) 512-4500

Henry Adams, LLC.
Consulting Engineers
600 Baltimore Avenue
Baltimore, MD 21204-4079
410.296.6500
Fax 410.296.3156

Mullins Engineering Co.
1257 ANNAPOLIS ROAD,
ODENTON, MD 21113
410-519-0800
FAX: 410-672-3977
MEC PROJECT NO. 0512300

Rev.	Date:	Comment:
20	1/29/10	RECORD DRAWING
19	8/4/09	BULLETIN #120
18	4/29/09	BULLETIN #109
17	4/30/09	BULLETIN #108R
16	3/30/09	BULLETIN #105
15	4/15/09	BULLETIN #99R
14	3/2/09	BULLETIN #94
13	12/16/08	BULLETIN #82
12	12/7/08	BULLETIN #80
11	11/20/08	BULLETIN #78
10	11/19/08	BULLETIN #72 (rev)
9	10/20/08	BULLETIN #69
8	9/4/08	BULLETIN #63
7	7/28/08	BULLETIN #55
6	6/23/08	BULLETIN #51
5	05/23/08	COORD. DWGS RFI 163
4	05/09/08	BULLETIN #31
3	04/14/08	CB-39
2	03/10/08	CBM-2
1	02/18/08	CBM-1
0	05/02/07	For Construction

Issued: May 2, 2007

Campus Center

621 West Lombard Street
University of Maryland, Baltimore
Baltimore, MD

HVAC Piping Garden Level

100% CONSTRUCTION DOCUMENTS

UMB PROJECT NO. 99-311
WTW PROJECT NO. 70-4091

H2.0

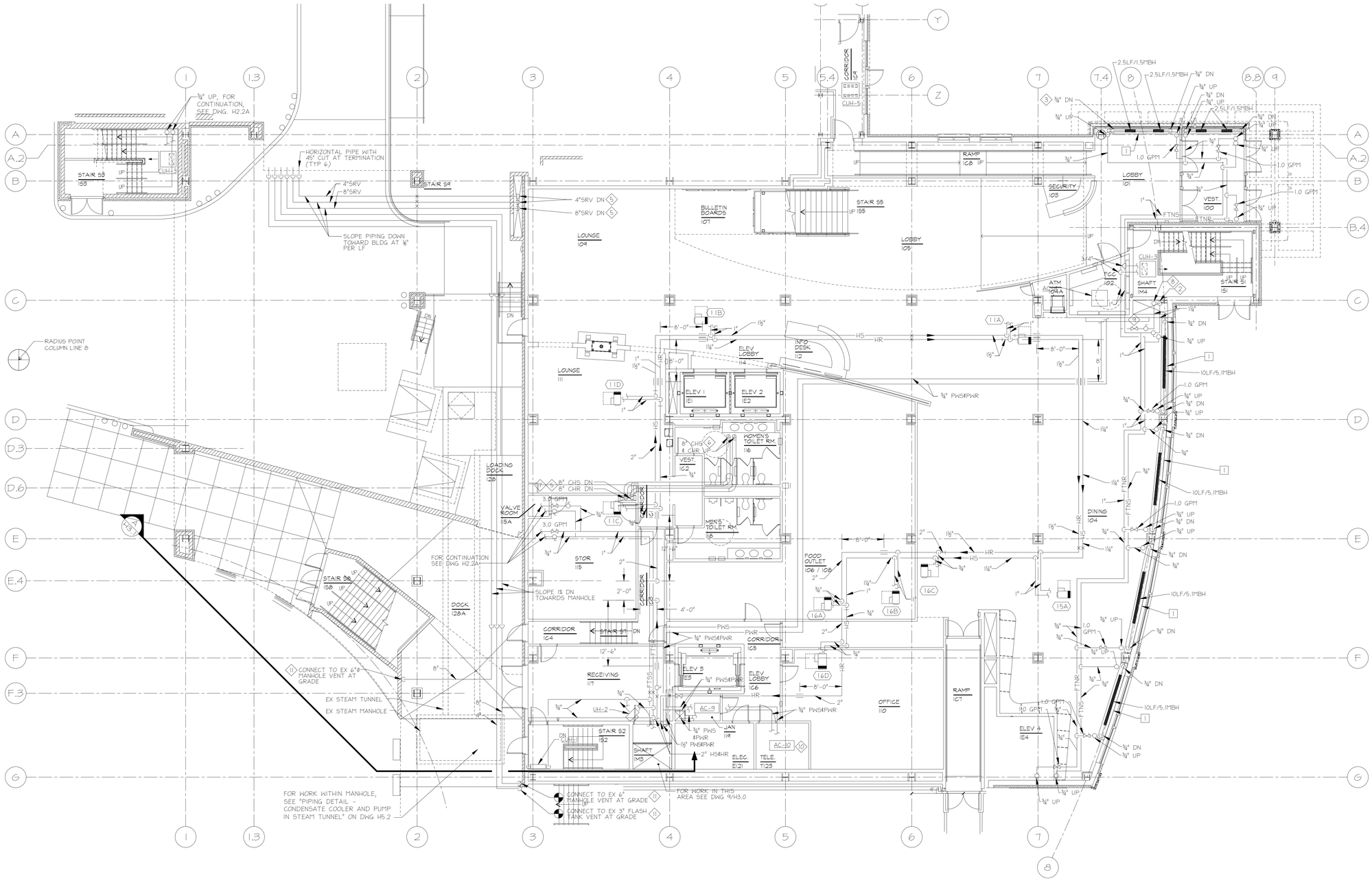

1 HVAC PIPING - FIRST FLOOR
1/8"=1'-0"

0 4' 8' 16'

DRAWING NOTES:

1. AT EXTERIOR WALLS, SLAB PENETRATIONS OF FINNED TUBE SYSTEM PIPING SHALL BE BETWEEN BEAM AND WALL.

SPECIAL NOTES:

1. UP TO SECOND FLOOR, FOR CONTINUATION SEE H2-2.
2. 2½" FTNR DN, 2" FTNR UP.
3. DN TO GROUND FLOOR, FOR CONTINUATION SEE H2-0.
4. NOT USED.
5. FOR CONTINUATION, SEE DWG. H3.2.
6. FOR CONTINUATION, SEE DWG. 2 / H3.0.
7. PROVIDE AS PART OF ALT #2.
8. 2½" FTNS DN, 2" FTNS UP.
9. 10 GPM.
10. SEE DWG. H3.5 FOR DETAILED LAYOUT.
11. REMOVE EXISTING GOOSENECK VENT PIPING.

IF THIS DRAWING DOES NOT MEASURE EXACTLY 30" X 42", IT HAS BEEN REDUCED OR ENLARGED. PLEASE DO NOT SCALE THIS DRAWING.

WTW ARCHITECTS
TIMBER COURT
127 ANDERSON STREET
PITTSBURGH, PA 15212-5801
(412) 321-0550
(412) 321-2431 FAX

ASSOCIATE ARCHITECT:

WBCM, – Architects
Whitney Bailey Cox & Magnani, LLC – Consulting Engineers
849 Fairmount Ave. Suite 100
Baltimore, MD 21286 (410) 512-4500

Henry Adams, LLC.
Consulting Engineers
600 Baltimore Avenue
Baltimore, MD 21204-4079
410.296.6500
Fax 410.296.3156

Mullins Engineering Co.
1257 ANNAPOLIS ROAD,
ODENTON, MD 21113
410-519-0800
FAX: 410-672-3977
MEC PROJECT NO. 0512300

Rev.	Date:	Comment:
20	1/29/10	RECORD DRAWING
19	8/4/09	BULLETIN #120
18	4/29/09	BULLETIN #109
17	4/30/09	BULLETIN #108R
16	3/30/09	BULLETIN #105
15	4/15/09	BULLETIN #99R
14	3/2/09	BULLETIN #94
13	12/16/08	BULLETIN #82
12	12/7/08	BULLETIN #80
11	11/20/08	BULLETIN #78
10	11/19/08	BULLETIN #72 (rev)
9	10/20/08	BULLETIN #69
8	9/4/08	BULLETIN #63
7	7/28/08	BULLETIN #55
6	6/23/08	BULLETIN #51
5	05/23/08	COORD. DWGS RFI 163
4	05/09/08	BULLETIN #31
3	04/14/08	CB-39
2	03/10/08	CBM-2
1	02/18/08	CBM-1
0	05/02/07	For Construction

Issued: May 2, 2007

Campus Center

621 West Lombard Street
University of Maryland, Baltimore
Baltimore, MD

HVAC Piping First Floor

100% CONSTRUCTION DOCUMENTS

UMB PROJECT NO. 99-311
WTW PROJECT NO. 70-4091

H2.1

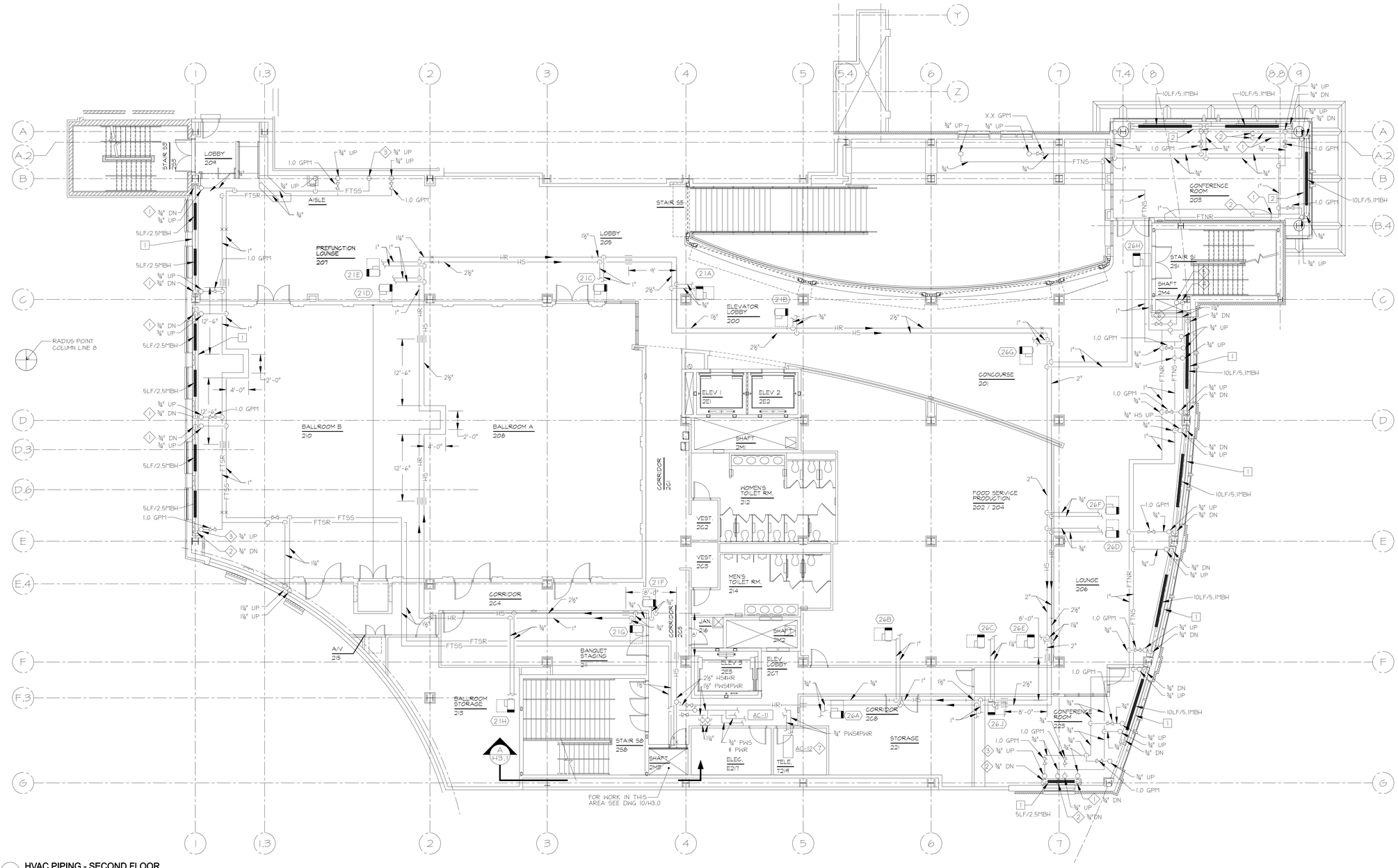

1 HVAC PIPING - SECOND FLOOR
1/8"=1'-0"

DRAWING NOTES:

1. AT EXTERIOR WALLS, SLAB PENETRATIONS OF FINNED TUBE SYSTEM PIPING SHALL BE BETWEEN BEAM AND WALL.

◇ SPECIAL NOTES:

1. FOR CONTINUATION, SEE DWG. H2.2A.
2. DN TO FIRST FLOOR CEILING, FOR CONTINUATION SEE H2-1.
3. HS4HR UP TO THIRD FLOOR, FOR CONTINUATION SEE H2-3.
4. 2" FTNR DN, 1½" FTNR UP.
5. 2" FTNS DN, 1½" FTNS UP.
6. 11.0 GPM.
7. SEE DWG. H3.5 FOR DETAILED LAYOUT. PROVIDE DRAIN PAN UNDER UNIT & PIPING WITHIN THIS ROOM.

IF THIS DRAWING DOES NOT MEASURE EXACTLY 30" X 42", IT HAS BEEN REDUCED OR ENLARGED. PLEASE DO NOT SCALE THIS DRAWING.

WTW ARCHITECTS
TIMBER COURT
127 ANDERSON STREET
PITTSBURGH, PA 15212-5801
(412) 321-0550
(412) 321-2431 FAX

ASSOCIATE ARCHITECT:

WBCM, – Architects
Whitney Bailey Cox & Magnani, LLC – Consulting Engineers
849 Fairmount Ave. Suite 100
Baltimore, MD 21286 (410) 512-4500

Henry Adams, LLC.
Consulting Engineers
600 Baltimore Avenue
Baltimore, MD 21204-4079
410.296.6500
Fax 410.296.3156

Mullins Engineering Co.
1257 ANNAPOLIS ROAD,
ODENTON, MD 21113
410-519-0800
FAX: 410-672-3977
MEC PROJECT NO. 0512300

Rev.	Date:	Comment:
20	1/29/10	RECORD DRAWING
19	8/4/09	BULLETIN #120
18	4/29/09	BULLETIN #109
17	4/30/09	BULLETIN #108R
16	3/30/09	BULLETIN #105
15	4/15/09	BULLETIN #99R
14	3/2/09	BULLETIN #94
13	12/16/08	BULLETIN #82
12	12/7/08	BULLETIN #80
11	11/20/08	BULLETIN #78
10	11/19/08	BULLETIN #72 (rev)
9	10/20/08	BULLETIN #69
8	9/4/08	BULLETIN #63
7	7/28/08	BULLETIN #55
6	6/23/08	BULLETIN #51
5	05/23/08	COORD. DWGS RFI 163
4	05/09/08	BULLETIN #31
3	04/14/08	CB-39
2	03/10/08	CBM-2
1	02/18/08	CBM-1
0	05/02/07	For Construction

Issued: May 2, 2007

Campus Center

621 West Lombard Street
University of Maryland, Baltimore
Baltimore, MD

HVAC Piping Second Floor

100% CONSTRUCTION DOCUMENTS

UMB PROJECT NO. 99-311
WTW PROJECT NO. 70-4091

H2.2

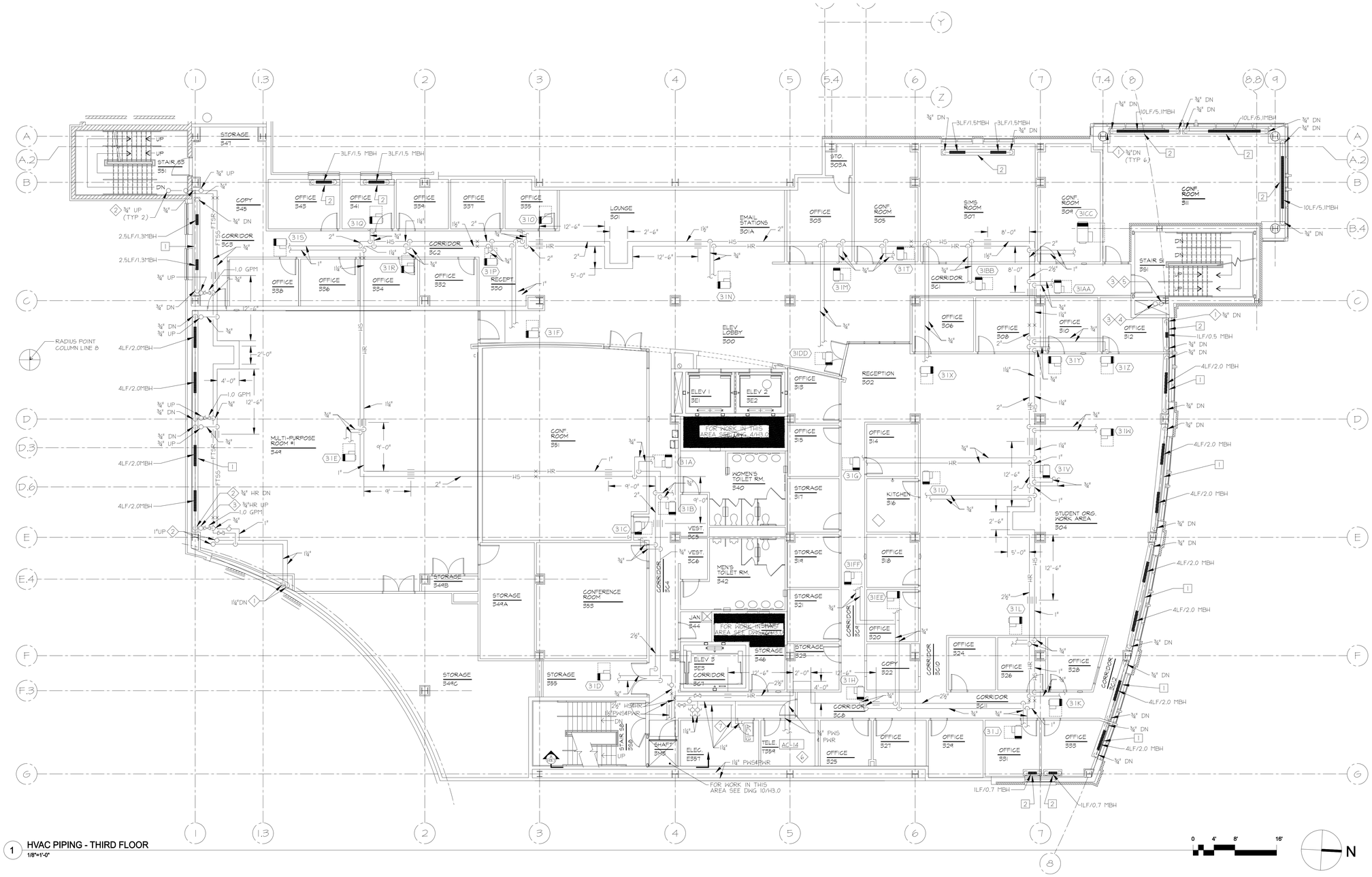

1 HVAC PIPING - THIRD FLOOR
1/8"=1'-0"

DRAWING NOTES:

1. AT EXTERIOR WALLS, SLAB PENETRATIONS OF FINNED TUBE SYSTEM PIPING SHALL BE BETWEEN BEAM AND WALL.

◇ SPECIAL NOTES:

1. H54HR DN TO SECOND FLOOR, FOR CONTINUATION SEE H2-2.
2. H54HR UP TO FOURTH FLOOR, FOR CONTINUATION SEE H2-4.
3. 1½" FTNR UP & DN.
4. 1½" FTNS UP & DN.
5. FOR CONTINUATION UP, SEE DWG. H2.3A.
6. SEE DWG. H3.5 FOR DETAILED LAYOUT. PROVIDE DRAIN PAN UNDER UNIT AND ASSOCIATED PIPING WITHIN ROOM.
7. COORDINATE PIPING TO MAINTAIN CODE CLEARANCES WITHIN ELECTRICAL ROOM.

IF THIS DRAWING DOES NOT MEASURE EXACTLY 30" X 42", IT HAS BEEN REDUCED OR ENLARGED. PLEASE DO NOT SCALE THIS DRAWING.

WTW ARCHITECTS
TIMBER COURT
127 ANDERSON STREET
PITTSBURGH, PA 15212-5801
(412) 321-0550
(412) 321-2431 FAX

ASSOCIATE ARCHITECT:
WBCM, – Architects
Whitney Bailey Cox & Magnani, LLC –
Consulting Engineers
849 Fairmount Ave. Suite 100
Baltimore, MD 21286 (410) 512-4500

Henry Adams, LLC.
Consulting Engineers
600 Baltimore Avenue
Baltimore, MD 21204-4079
410.296.6500
Fax 410.296.3156

Mullins Engineering Co.
1257 ANNAPOLIS ROAD,
ODENTON, MD 21113
410-519-0800
FAX: 410-672-3977
MEC PROJECT NO. 0512300

Rev.	Date:	Comment:
20	1/29/10	RECORD DRAWING
19	8/4/09	BULLETIN #120
18	4/29/09	BULLETIN #109
17	4/30/09	BULLETIN #108R
16	3/30/09	BULLETIN #105
15	4/15/09	BULLETIN #99R
14	3/2/09	BULLETIN #94
13	12/16/08	BULLETIN #82
12	12/7/08	BULLETIN #80
11	11/20/08	BULLETIN #78
10	11/19/08	BULLETIN #72 (rev)
9	10/20/08	BULLETIN #69
8	9/4/08	BULLETIN #63
7	7/28/08	BULLETIN #55
6	6/23/08	BULLETIN #51
5	05/23/08	COORD. DWGS RFI 163
4	05/09/08	BULLETIN #31
3	04/14/08	CB-39
2	03/10/08	CBM-2
1	02/18/08	CBM-1
0	05/02/07	For Construction

Issued: May 2, 2007

Campus Center

621 West Lombard Street
University of Maryland, Baltimore
Baltimore, MD

HVAC Piping Third Floor

100% CONSTRUCTION DOCUMENTS

UMB PROJECT NO. 99-311
WTW PROJECT NO. 70-4091

H2.3

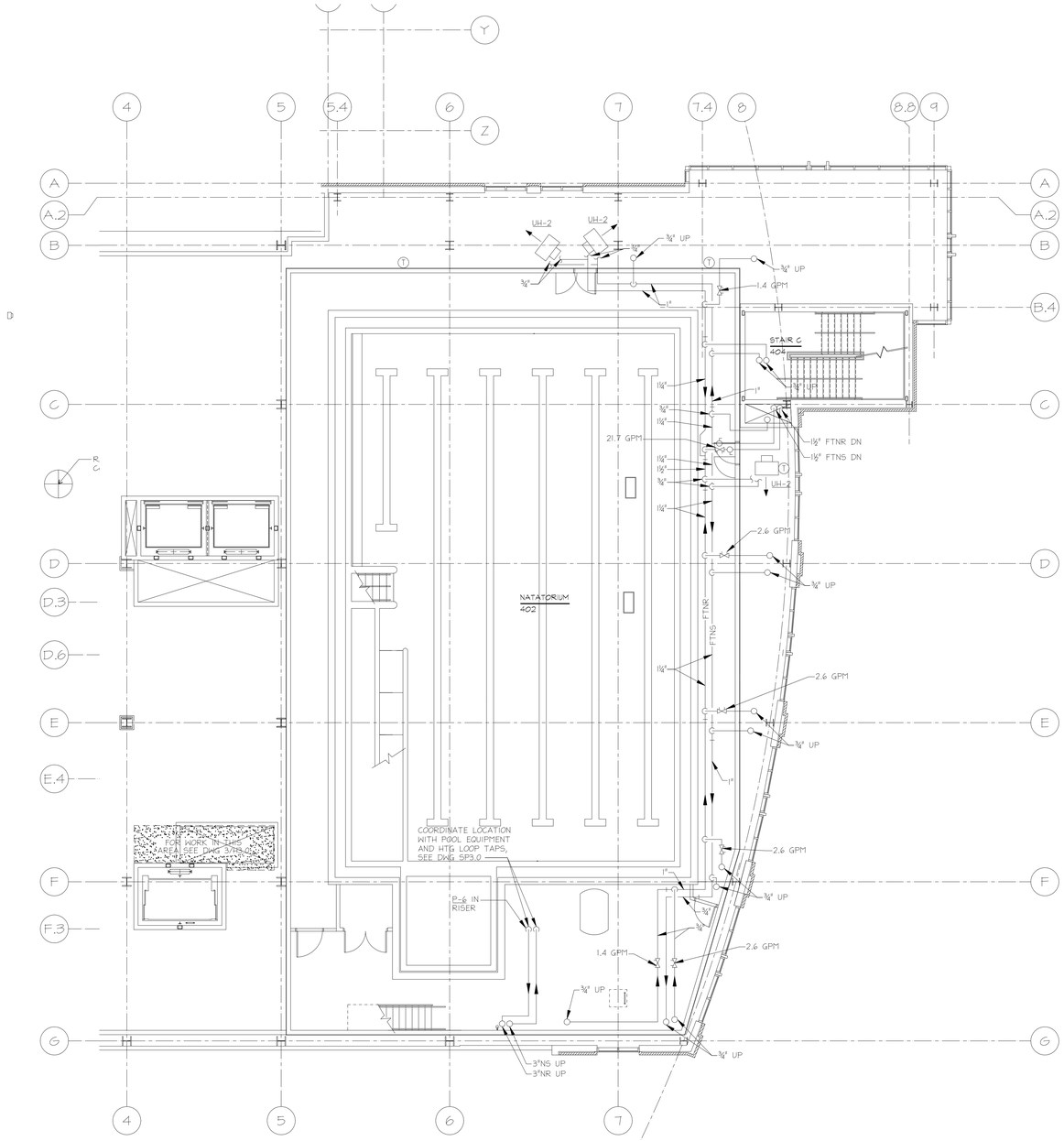

2 HVAC PIPING - PART FOURTH FLOOR - INTERSTITIAL SPACE

1/8"=1'-0"

0 4' 8' 16'

N

◇ SPECIAL NOTES:

RECORD DRAWING: This record drawing has been prepared based upon information provided by others. While this information is believed to be reliable, the Design Professional has not verified its accuracy, and thus is not responsible for the accuracy or completeness of this record drawing or for any errors or omissions which may have been incorporated into it as a result of erroneous information provided by others. Those relying on this record document are advised to obtain independent verification of its accuracy before applying it for any purpose.

IF THIS DRAWING DOES NOT MEASURE EXACTLY 30" X 42", IT HAS BEEN REDUCED OR ENLARGED. PLEASE DO NOT SCALE THIS DRAWING.

WTW ARCHITECTS

TIMBER COURT
127 ANDERSON STREET
PITTSBURGH, PA 15212-5801
(412) 321-0550
(412) 321-2431 FAX

ASSOCIATE ARCHITECT:

WBCM, – Architects
Whitney Bailey Cox & Magnani, LLC – Consulting Engineers
849 Fairmount Ave. Suite 100
Baltimore, MD 21286 (410) 512-4500

Henry Adams, LLC.
Consulting Engineers
600 Baltimore Avenue
Baltimore, MD 21204-4079
410.296.6500
Fax 410.296.3156

Mullins Engineering Co.
1257 ANNAPOLIS ROAD,
ODENTON, MD 21113
410-519-0800
FAX: 410-672-3977

MEC PROJECT NO. 0512300

Rev.	Date:	Comment:
20	1/29/10	RECORD DRAWING
19	8/4/09	BULLETIN #120
18	4/29/09	BULLETIN #109
17	4/30/09	BULLETIN #108R
16	3/30/09	BULLETIN #105
15	4/15/09	BULLETIN #99R
14	3/2/09	BULLETIN #94
13	12/16/08	BULLETIN #82
12	12/7/08	BULLETIN #80
11	11/20/08	BULLETIN #78
10	11/19/08	BULLETIN #72 (rev)
9	10/20/08	BULLETIN #69
8	9/4/08	BULLETIN #63
7	7/28/08	BULLETIN #55
6	6/23/08	BULLETIN #51
5	05/23/08	COORD. DWGS RFI 163
4	05/09/08	BULLETIN #31
3	04/14/08	CB-39
2	03/10/08	CBM-2
1	02/18/08	CBM-1
0	05/02/07	For Construction

Issued: May 2, 2007

Campus Center

621 West Lombard Street
University of Maryland, Baltimore
Baltimore, MD

HVAC Piping Lower Pool Level

100% CONSTRUCTION DOCUMENTS

UMB PROJECT NO. 99-311
WTW PROJECT NO. 70-4091

H2.3A

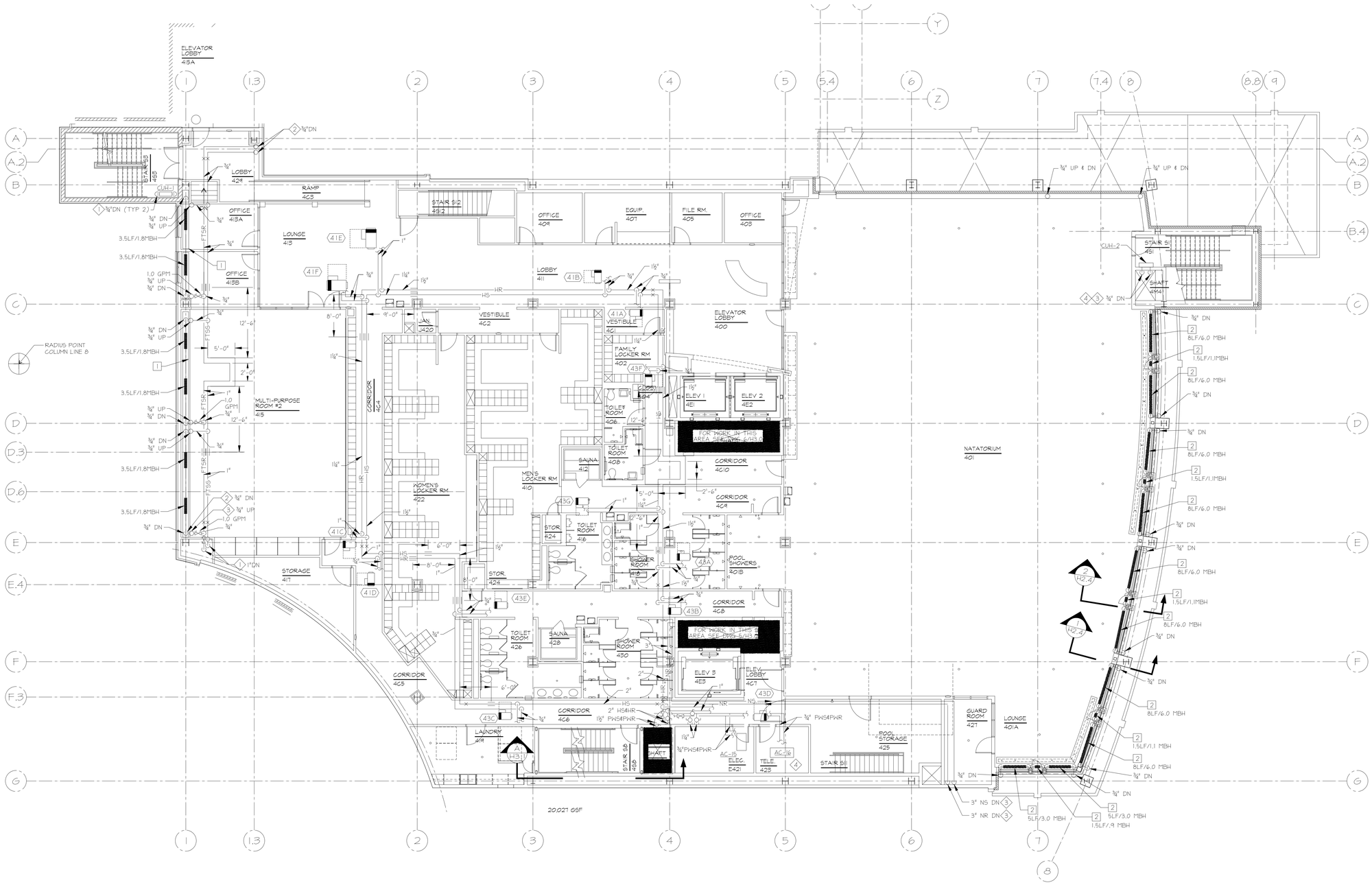

1 HVAC PIPING - FOURTH FLOOR
1/8"=1'-0"

0 4' 8' 16'

N

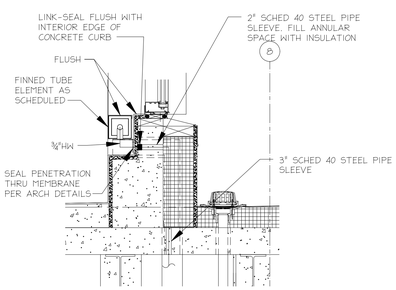

2 SECTION 1/H2.4
1"=1'-0"

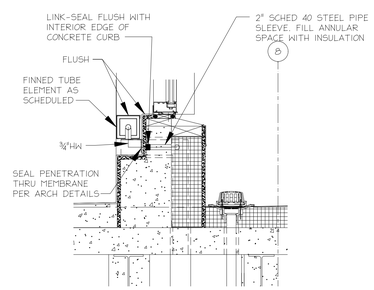

3 SECTION 2/H2.4
1"=1'-0"

SPECIAL NOTES:

1. HS4HR DN TO THIRD FLOOR CEILING, FOR CONTINUATION SEE H2-3.
2. HS4HR UP TO FIFTH FLOOR, FOR CONTINUATION SEE H2-5.
3. DN TO NATATORIUM UNDERFLOOR SPACE, FOR CONTINUATION SEE H2.3A.
4. SEE DWG. H3.5 FOR DETAILED LAYOUT. PROVIDE DRAIN PAN UNDER UNIT AND ASSOCIATED PIPING WITHIN ROOM.

RECORD DRAWING: This record drawing has been prepared based upon information provided by others. While this information is believed to be reliable, the Design Professional has not verified its accuracy, and thus is not responsible for the accuracy or completeness of this record drawing or for any errors or omissions which may have been incorporated into it as a result of erroneous information provided by others. Those relying on this record document are advised to obtain independent verification of its accuracy before applying it for any purpose.

IF THIS DRAWING DOES NOT MEASURE EXACTLY 30" x 42", IT HAS BEEN REDUCED OR ENLARGED. PLEASE DO NOT SCALE THIS DRAWING.

WTW ARCHITECTS
TIMBER COURT
127 ANDERSON STREET
PITTSBURGH, PA 15212-5801
(412) 321-0550
(412) 321-2431 FAX

ASSOCIATE ARCHITECT:

WBCM, – Architects
Whitney Bailey Cox & Magnani, LLC – Consulting Engineers
849 Fairmount Ave. Suite 100
Baltimore, MD 21286 (410) 512-4500

Henry Adams, LLC.
Consulting Engineers
600 Baltimore Avenue
Baltimore, MD 21204-4079
410.296.6500
Fax 410.296.3156

Mullins Engineering Co.
1257 ANNAPOLIS ROAD,
ODENTON, MD 21113
410-519-0800
FAX: 410-672-3977

MEC PROJECT NO. 0512300

Rev.	Date:	Comment:
20	1/29/10	RECORD DRAWING
19	8/4/09	BULLETIN #120
18	4/29/09	BULLETIN #109
17	4/30/09	BULLETIN #109R
16	3/30/09	BULLETIN #105
15	4/15/09	BULLETIN #99R
14	3/2/09	BULLETIN #94
13	12/16/08	BULLETIN #82
12	12/7/08	BULLETIN #80
11	11/20/08	BULLETIN #78
10	11/19/08	BULLETIN #72 (rev)
9	10/20/08	BULLETIN #69
8	9/4/08	BULLETIN #63
7	7/28/08	BULLETIN #55
6	6/23/08	BULLETIN #51
5	05/23/08	COORD. DWGS RFI 163
4	05/09/08	BULLETIN #31
3	04/14/08	CB-39
2	03/10/08	CBM-2
1	02/18/08	CBM-1
0	05/02/07	For Construction

Issued: May 2, 2007

Campus Center

621 West Lombard Street
University of Maryland, Baltimore
Baltimore, MD

HVAC Piping Fourth Floor

100% CONSTRUCTION DOCUMENTS

UMB PROJECT NO. 99-311
WTW PROJECT NO. 70-4091

H2.4

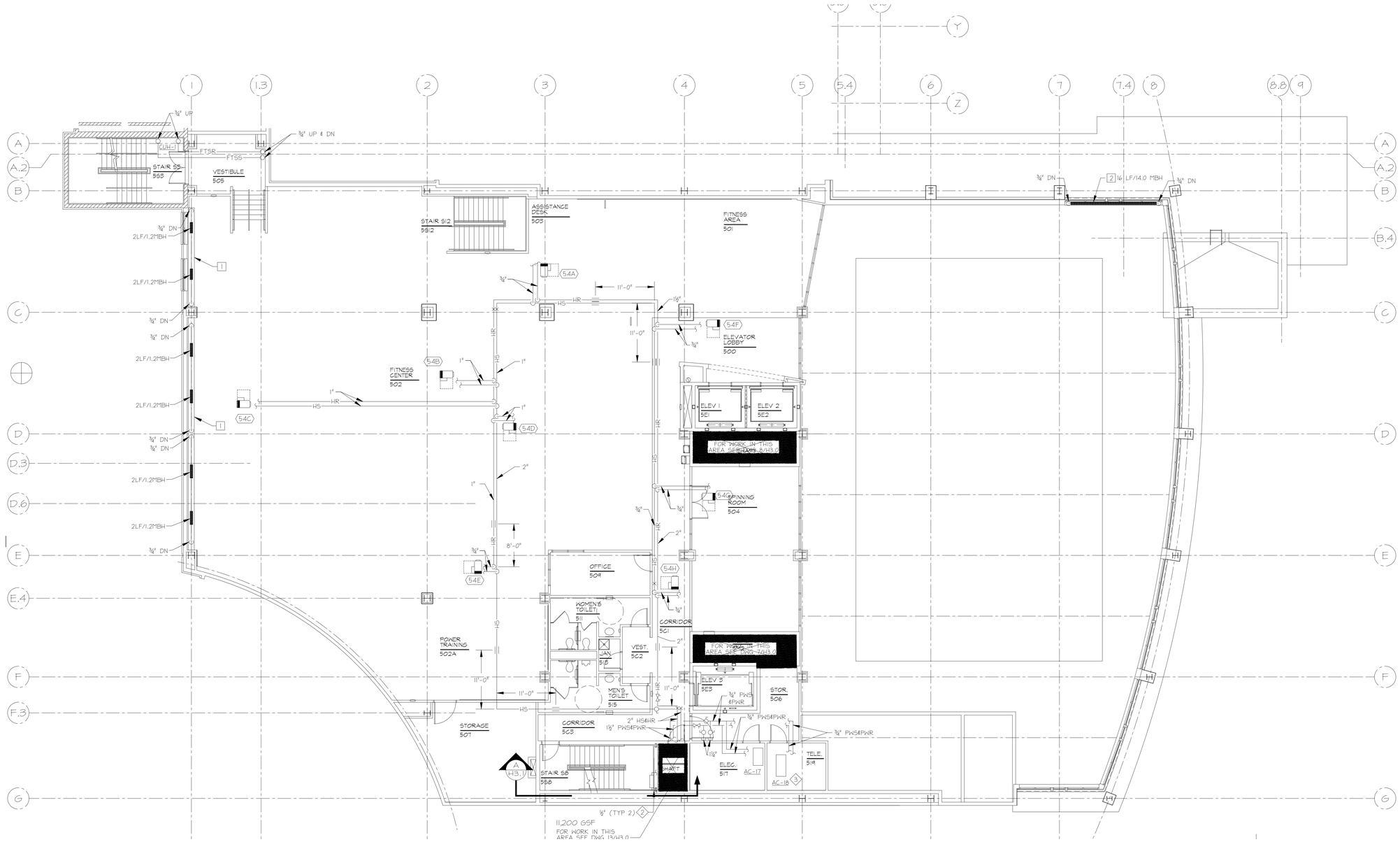

1 HVAC PIPING AND DUCTWORK - FIFTH FLOOR
1/8"=1'-0"

0 4' 8' 16'

N

SPECIAL NOTES:

1 H54HR DN TO FOURTH FLOOR, FOR CONTINUATION SEE H2-4.

2 PIPE THRU WALL INTO SHAFT, FOR CONTINUATION SEE H3-0.

3 SEE DWG. H3.5 FOR DETAILED LAYOUT. PROVIDE DRAIN PANS.

RECORD DRAWING: This record drawing has been prepared based upon information provided by others. While this information is believed to be reliable, the Design Professional has not verified its accuracy, and thus is not responsible for the accuracy or completeness of this record drawing or for any errors or omissions which may have been incorporated into it as a result of erroneous information provided by others. Those relying on this record document are advised to obtain independent verification of its accuracy before applying it for any purpose.

IF THIS DRAWING DOES NOT MEASURE EXACTLY 30" X 42", IT HAS BEEN REDUCED OR ENLARGED. PLEASE DO NOT SCALE THIS DRAWING.

WTW ARCHITECTS

TIMBER COURT
127 ANDERSON STREET
PITTSBURGH, PA 15212-5801
(412) 321-0550
(412) 321-2431 FAX

ASSOCIATE ARCHITECT:

WBCM, – Architects
Whitney Bailey Cox & Magnani, LLC –
Consulting Engineers
849 Fairmount Ave. Suite 100
Baltimore, MD 21286 (410) 512-4500

Henry Adams, LLC.
Consulting Engineers
600 Baltimore Avenue
Baltimore, MD 21204-4079
410.296.6500
Fax 410.296.3156

Mullins Engineering Co.
1257 ANNAPOLIS ROAD,
ODENTON, MD 21113
410-519-0800
FAX: 410-672-3977

MEC PROJECT NO. 0512300

Rev.	Date:	Comment:
20	1/29/10	RECORD DRAWING
19	8/4/09	BULLETIN #120
18	4/29/09	BULLETIN #109
17	4/30/09	BULLETIN #108R
16	3/30/09	BULLETIN #105
15	4/15/09	BULLETIN #99R
14	3/2/09	BULLETIN #94
13	12/16/08	BULLETIN #82
12	12/7/08	BULLETIN #80
11	11/20/08	BULLETIN #78
10	11/19/08	BULLETIN #72 (rev)
9	10/20/08	BULLETIN #69
8	9/4/08	BULLETIN #63
7	7/28/08	BULLETIN #55
6	6/23/08	BULLETIN #51
5	05/23/08	COORD. DWGS RFI 163
4	05/09/08	BULLETIN #31
3	04/14/08	CB-39
2	03/10/08	CBM-2
1	02/18/08	CBM-1
0	05/02/07	For Construction

Issued: May 2, 2007

Campus Center

621 West Lombard Street
University of Maryland, Baltimore
Baltimore, MD

HVAC Piping Fifth Floor

100% CONSTRUCTION DOCUMENTS

UMB PROJECT NO. 99-311
WTW PROJECT NO. 70-4091

H2.5

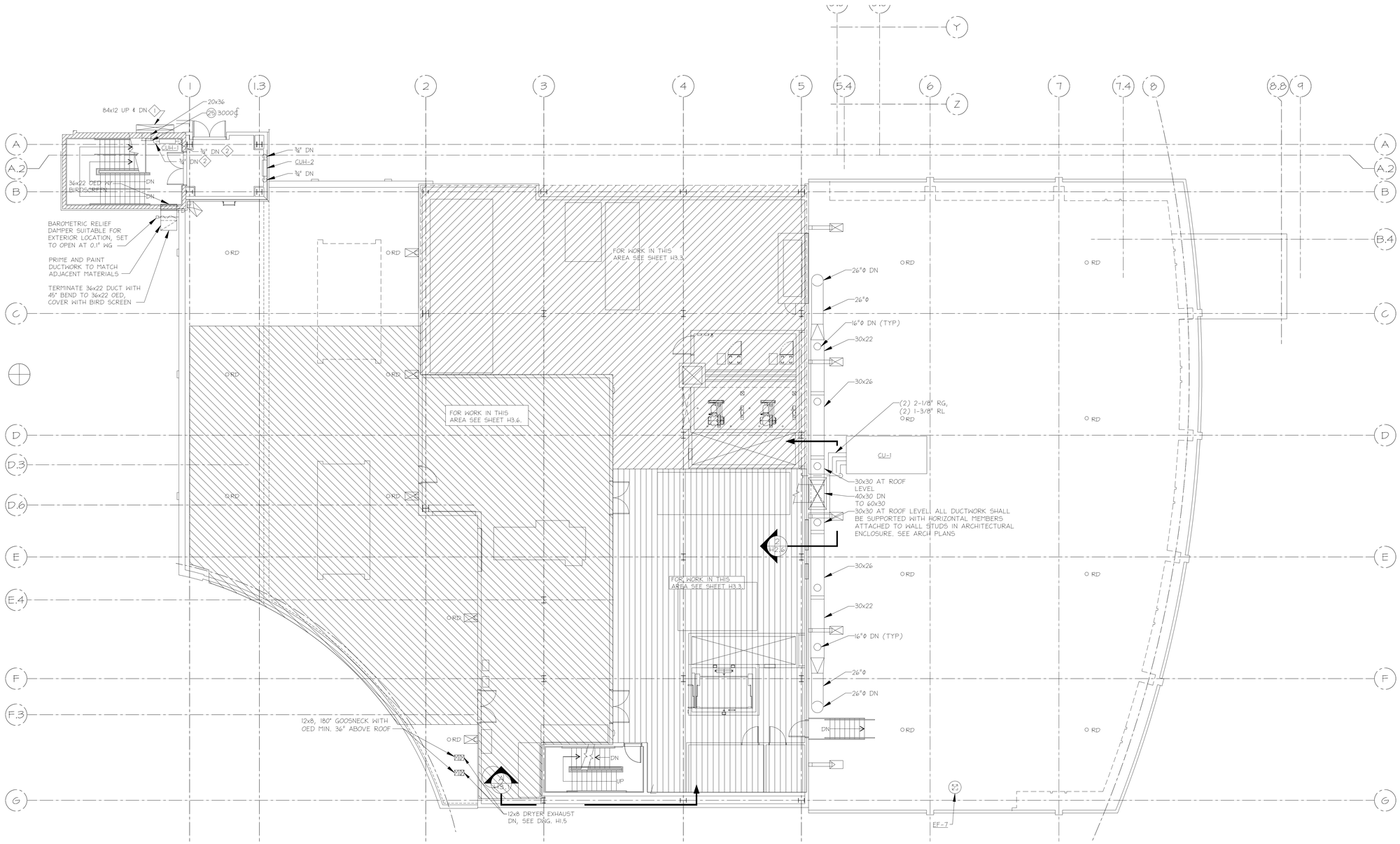

1 HVAC PIPING - PENTHOUSE AND FIFTH FLOOR ROOF
1/8"=1'-0"

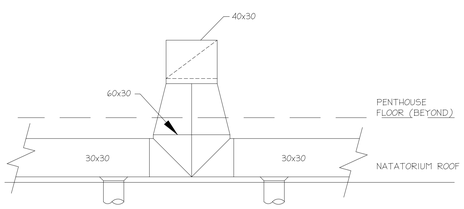

2 SECTION
1/4"=1'-0"

SPECIAL NOTES:

1 FOR CONTINUATION DN, SEE DWG. H1.5, FOR CONTINUATION UP, SEE DWG. H2.7.

2 MANUAL AIR VENT AT TOP OF EACH RISER.

RECORD DRAWING: This record drawing has been prepared based upon information provided by others. While this information is believed to be reliable, the Design Professional has not verified its accuracy, and thus is not responsible for the accuracy or completeness of this record drawing or for any errors or omissions which may have been incorporated into it as a result of erroneous information provided by others. Those relying on this record document are advised to obtain independent verification of its accuracy before applying it for any purpose.

IF THIS DRAWING DOES NOT MEASURE EXACTLY 30" X 42", IT HAS BEEN REDUCED OR ENLARGED. PLEASE DO NOT SCALE THIS DRAWING.

WTW ARCHITECTS
TIMBER COURT
127 ANDERSON STREET
PITTSBURGH, PA 15212-5801
(412) 321-0550
(412) 321-2431 FAX

ASSOCIATE ARCHITECT:

WBCM, – Architects
Whitney Bailey Cox & Magnani, LLC –
Consulting Engineers
849 Fairmount Ave. Suite 100
Baltimore, MD 21286 (410) 512-4500

Henry Adams, LLC.
Consulting Engineers
600 Baltimore Avenue
Baltimore, MD 21204-4079
410.296.6500
Fax 410.296.3156

Mullins Engineering Co.
1257 ANNAPOLIS ROAD,
ODENTON, MD 21113
410-519-0800
FAX: 410-672-3977
MEC PROJECT NO. 0512300

Rev.	Date:	Comment:
20	1/29/10	RECORD DRAWING
19	8/4/09	BULLETIN #120
18	4/29/09	BULLETIN #109
17	4/30/09	BULLETIN #108R
16	3/30/09	BULLETIN #105
15	4/15/09	BULLETIN #99R
14	3/2/09	BULLETIN #94
13	12/16/08	BULLETIN #82
12	12/7/08	BULLETIN #80
11	11/20/08	BULLETIN #78
10	11/19/08	BULLETIN #72 (rev)
9	10/20/08	BULLETIN #69
8	9/4/08	BULLETIN #63
7	7/28/08	BULLETIN #55
6	6/23/08	BULLETIN #51
5	05/23/08	COORD. DWGS RFI 163
4	05/09/08	BULLETIN #31
3	04/14/08	CB-39
2	03/10/08	CBM-2
1	02/18/08	CBM-1
0	05/02/07	For Construction

Issued: May 2, 2007

Campus Center

621 West Lombard Street
University of Maryland,
Baltimore
Baltimore, MD

HVAC-Penthouse, 5th Floor Roof Plan

100% CONSTRUCTION DOCUMENTS

UMB PROJECT NO. 99-311
WTW PROJECT NO. 70-4091

H2.6

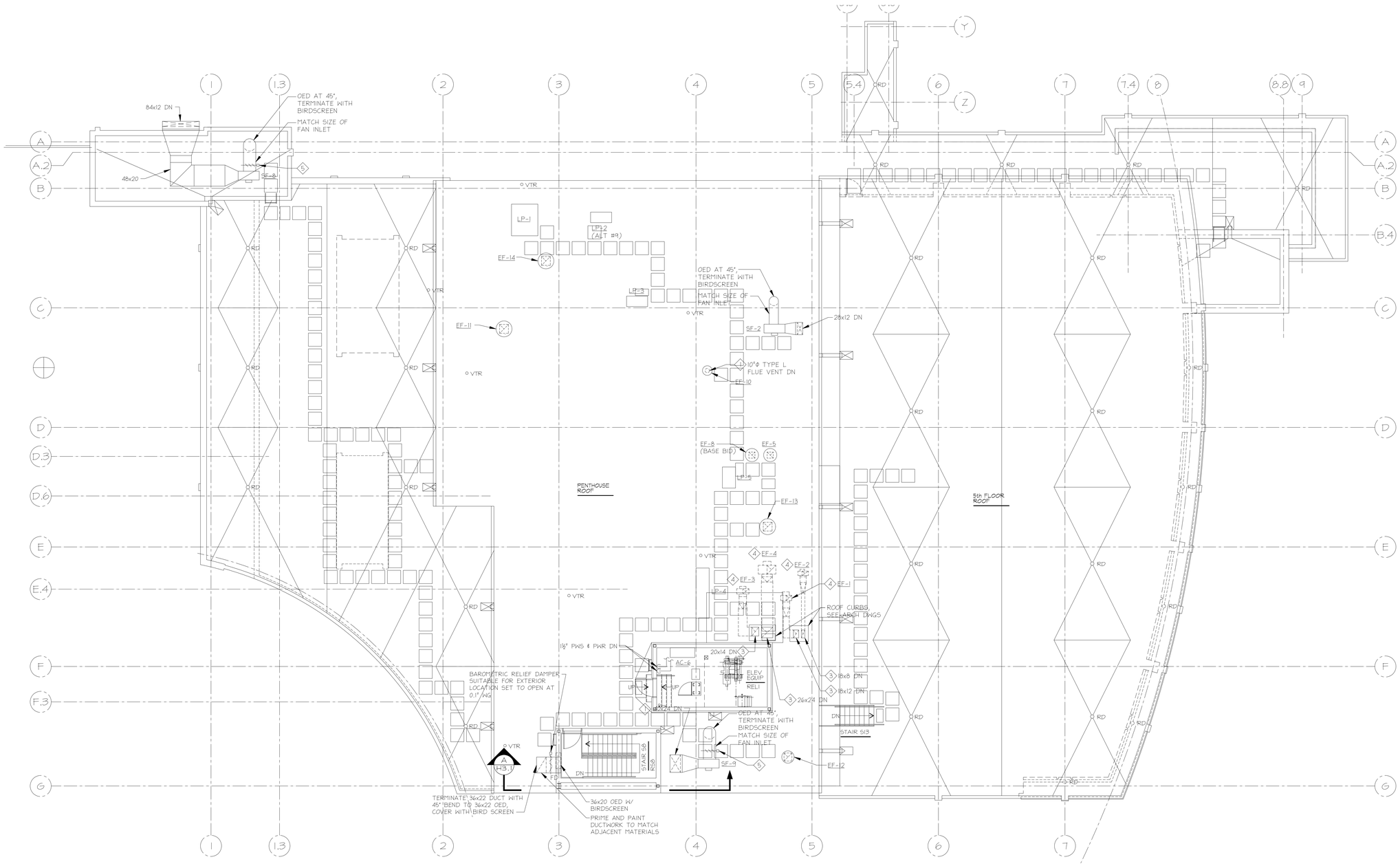

1 HVAC - PENTHOUSE ROOF
1/8"=1'-0"

0 4' 8' 16'

N

SPECIAL NOTES:

1. FOR CONTINUATION, SEE DRAWING H3.3.
2. FOR CONTINUATION, SEE DRAWING H1.4
3. CAP DUCT ABOVE ROOF CURB
4. FUTURE DUCTWORK AND FANS
5. LOW-LEAKAGE PARALLEL BLADE DAMPER WITH 24 VDC ACTUATOR, FOR CONNECTION TO AND CONTROL BY FIRE ALARM SYSTEM. DAMPER AND ACTUATOR SHALL BE SUITABLE FOR EXTERIOR INSTALLATION. DAMPER SHALL BE INTERLOCKED WITH FAN SUCH THAT WHEN IT IS OPERATING, DAMPER IS OPEN.

WTW ARCHITECTS
TIMBER COURT
127 ANDERSON STREET
PITTSBURGH, PA 15212-5801
(412) 321-0550
(412) 321-2431 FAX

ASSOCIATE ARCHITECT:

WBCM, – Architects
Whitney Bailey Cox & Magnani, LLC –
Consulting Engineers
849 Fairmount Ave. Suite 100
Baltimore, MD 21286 (410) 512-4500

Henry Adams, LLC.
Consulting Engineers
600 Baltimore Avenue
Baltimore, MD 21204-4079
410.296.6500
Fax 410.296.3156

Mullins Engineering Co.
1257 ANNAPOLIS ROAD,
ODENTON, MD 21113
410-519-0800
FAX: 410-672-3977

MEC PROJECT NO. 0512300

Rev.	Date:	Comment:
20	1/29/10	RECORD DRAWING
19	8/4/09	BULLETIN #120
18	4/29/09	BULLETIN #109
17	4/30/09	BULLETIN #108R
16	3/30/09	BULLETIN #105
15	4/15/09	BULLETIN #99R
14	3/2/09	BULLETIN #94
13	12/16/08	BULLETIN #82
12	12/7/08	BULLETIN #80
11	11/20/08	BULLETIN #78
10	11/19/08	BULLETIN #72 (rev)
9	10/20/08	BULLETIN #69
8	9/4/08	BULLETIN #63
7	7/28/08	BULLETIN #55
6	6/23/08	BULLETIN #51
5	05/23/08	COORD. DWGS RFI 163
4	05/09/08	BULLETIN #31
3	04/14/08	CB-39
2	03/10/08	CBM-2
1	02/18/08	CBM-1
0	05/02/07	For Construction

Issued: May 2, 2007

Campus Center

621 West Lombard Street
University of Maryland, Baltimore
Baltimore, MD

HVAC Penthouse Roof

100% CONSTRUCTION DOCUMENTS

UMB PROJECT NO. 99-311
WTW PROJECT NO. 70-4091

H2.7

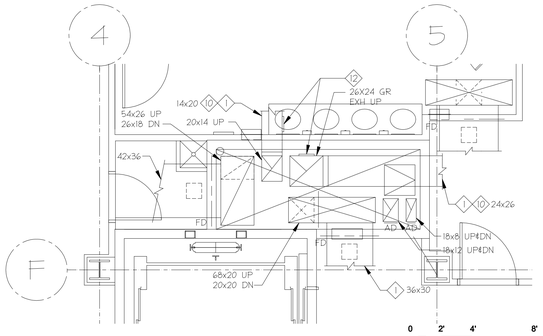

1 SECOND FLOOR EAST SHAFT PLAN
1/4"=1'-0"

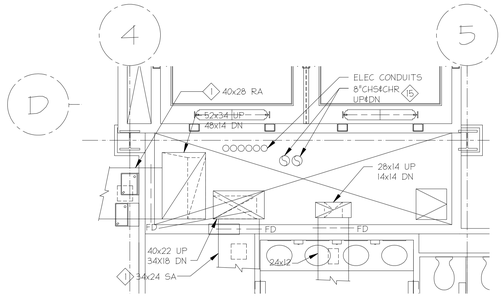

2 SECOND FLOOR WEST SHAFT PLAN
1/4"=1'-0"

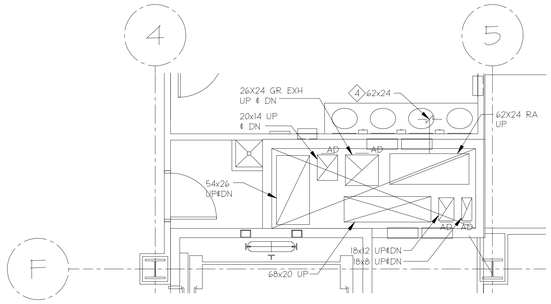

3 THIRD FLOOR EAST SHAFT PLAN
1/4"=1'-0"

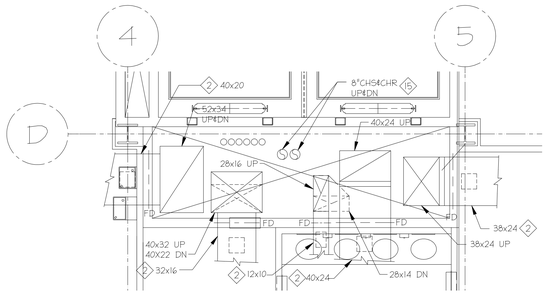

4 THIRD FLOOR WEST SHAFT PLAN
1/4"=1'-0"

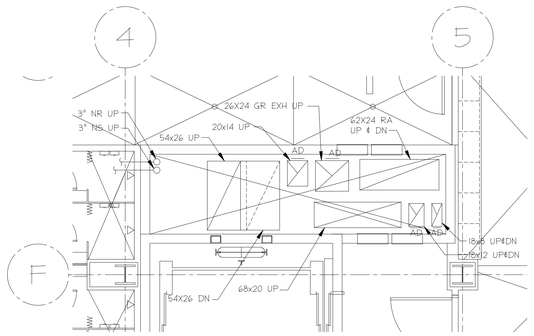

5 FOURTH FLOOR EAST SHAFT PLAN
1/4"=1'-0"

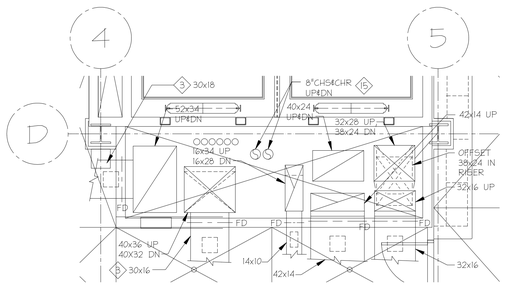

6 FOURTH FLOOR WEST SHAFT PLAN
1/4"=1'-0"

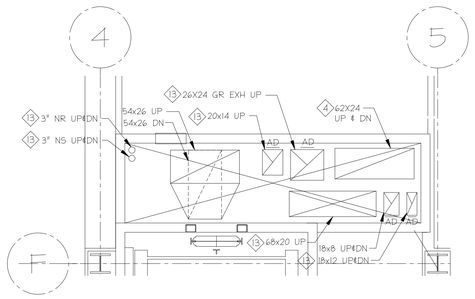

7 FIFTH FLOOR EAST SHAFT PLAN
1/4"=1'-0"

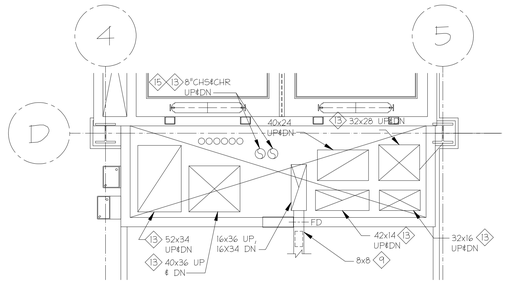

8 FIFTH FLOOR WEST SHAFT PLAN
1/4"=1'-0"

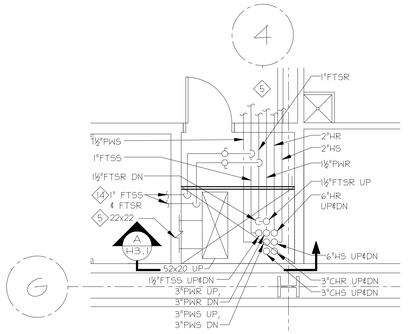

9 FIRST FLOOR PIPE SHAFT PLAN
1/4"=1'-0"

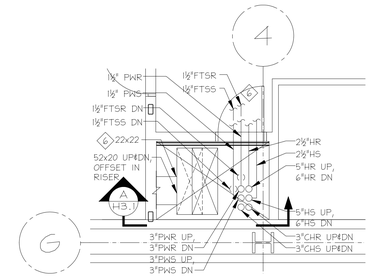

10 SECOND FLOOR PIPE SHAFT PLAN
1/4"=1'-0"

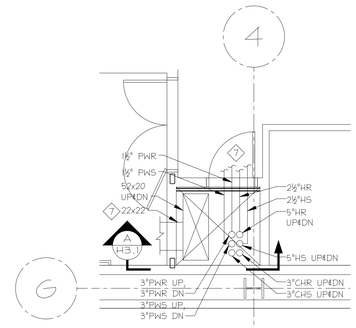

11 THIRD FLOOR PIPE SHAFT PLAN
1/4"=1'-0"

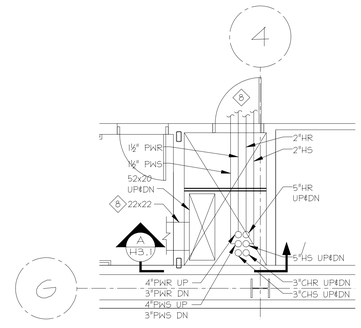

12 FOURTH FLOOR PIPE SHAFT PLAN
1/4"=1'-0"

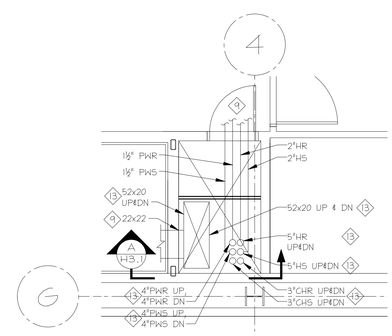

13 FIFTH FLOOR PIPE SHAFT PLAN
1/4"=1'-0"

DRAWING NOTES:

1. ACCESS DOORS ON GREASE EXHAUST DUCTS SHALL BE PROVIDE WITH A SIGN SAYING "ACCESS DOOR - DO NOT OBSTRUCT" PER NFPA96.

SPECIAL NOTES:

1 FOR CONTINUATION SEE DRAWING H1.2.

2 FOR CONTINUATION SEE DRAWING H1.3.

3 FOR CONTINUATION SEE DRAWING H1.4.

4 FOR CONTINUATION SEE DRAWING H1.3A.

5 FOR CONTINUATION SEE DRAWING H2.1.

6 FOR CONTINUATION SEE DRAWING H2.2.

7 FOR CONTINUATION SEE DRAWING H2.3.

8 FOR CONTINUATION SEE DRAWING H2.4.

9 FOR CONTINUATION SEE DRAWING H2.5.

10 UTILIZE FIRE-RATED DUCTWRAP AS SPECIFIED. DO NOT INSTALL FIRE DAMPER AT SHAFT WALL.

11 FOR CONTINUATION SEE DRAWING H2.4.

12 PROVIDE FIRE RATED ACCESS DOOR AT BOTTOM OF RISERS.

13 FOR CONTINUATION UP, SEE DRAWING H3.3.

14 FOR CONTINUATION, SEE DRAWING H3.1.

15 PROVIDE UNDER ALT. #2.

0 2' 4' 8'
SCALE 1/4"=1'-0"

N

IF THIS DRAWING DOES NOT MEASURE EXACTLY 30" X 42", IT HAS BEEN REDUCED OR ENLARGED. PLEASE DO NOT SCALE THIS DRAWING.

WTW ARCHITECTS
TIMBER COURT
127 ANDERSON STREET
PITTSBURGH, PA 15212-5801
(412) 321-0550
(412) 321-2431 FAX

ASSOCIATE ARCHITECT:

WBCM, – Architects
Whitney Bailey Cox & Magnani, LLC – Consulting Engineers
849 Fairmount Ave. Suite 100
Baltimore, MD 21286 (410) 512-4500

Henry Adams, LLC.
Consulting Engineers
600 Baltimore Avenue
Baltimore, MD 21204-4079
410.296.6500
Fax 410.296.3156

Mullins Engineering Co.
1257 ANNAPOLIS ROAD,
ODENTON, MD 21113
410-519-0800
FAX: 410-672-3977

MEC PROJECT NO. 0512300

Rev.	Date:	Comment:
20	1/29/10	RECORD DRAWING
19	8/4/09	BULLETIN #120
18	4/29/09	BULLETIN #109
17	4/30/09	BULLETIN #108R
16	3/30/09	BULLETIN #105
15	4/15/09	BULLETIN #99R
14	3/2/09	BULLETIN #94
13	12/16/08	BULLETIN #82
12	12/7/08	BULLETIN #80
11	11/20/08	BULLETIN #78
10	11/19/08	BULLETIN #72 (rev)
9	10/20/08	BULLETIN #69
8	9/4/08	BULLETIN #63
7	7/28/08	BULLETIN #55
6	6/23/08	BULLETIN #51
5	05/23/08	COORD. DWGS RFI 163
4	05/09/08	BULLETIN #31
3	04/14/08	CB-39
2	03/10/08	CBM-2
1	02/18/08	CBM-1
0	05/02/07	For Construction

Issued: May 2, 2007

Campus Center

621 West Lombard Street
University of Maryland,
Baltimore
Baltimore, MD

Shaft Part Plans

100% CONSTRUCTION DOCUMENTS

UMB PROJECT NO. 99-311
WTW PROJECT NO. 70-4091

H3.0

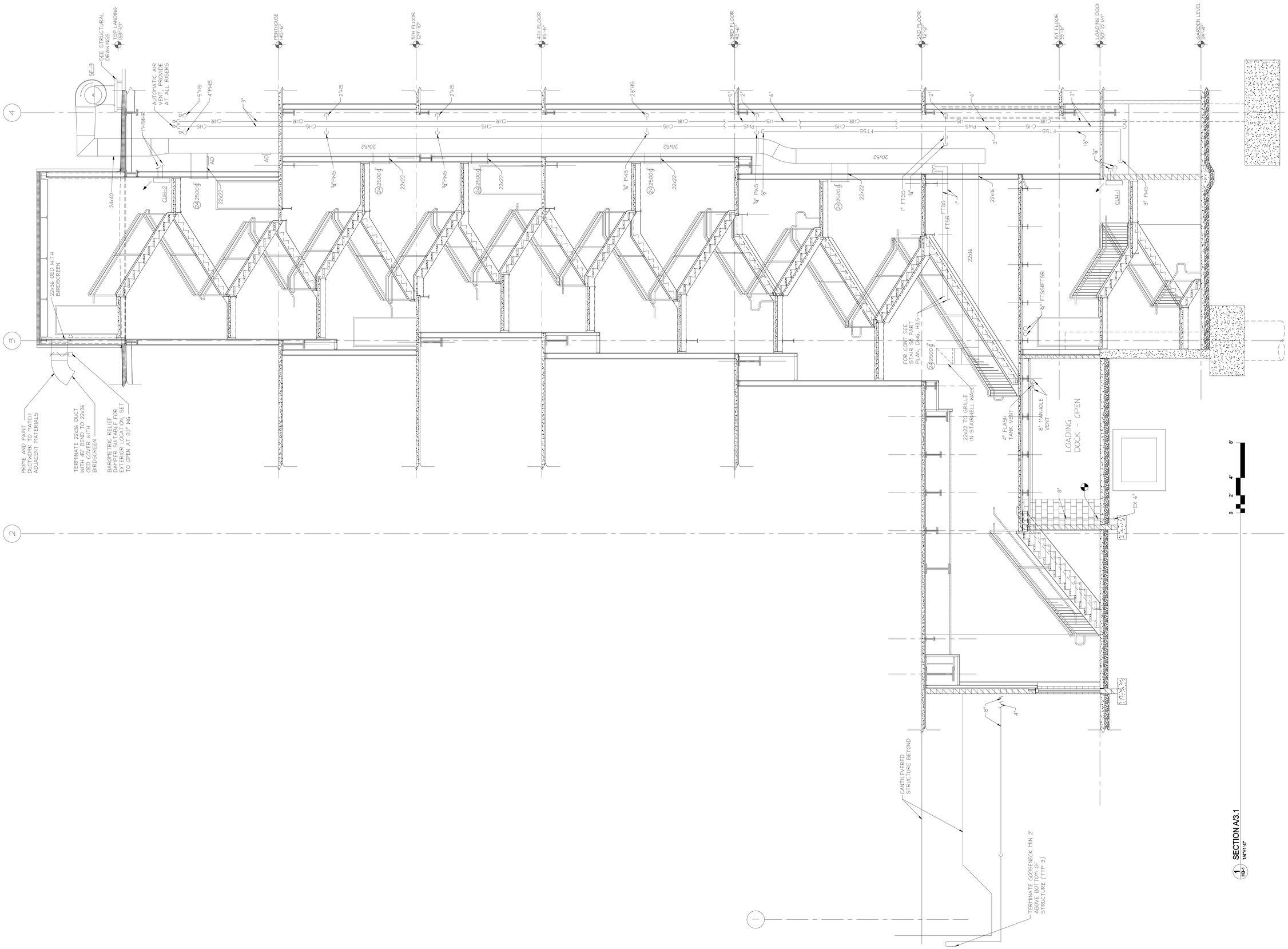

RECORD DRAWING: This record drawing has been prepared based upon information provided by others. While this information is believed to be reliable, the Design Professional has not verified its accuracy, and thus is not responsible for the accuracy or completeness of this record drawing or for any errors or omissions which may have been incorporated into it as a result of erroneous information provided by others. Those relying on this record document are advised to obtain independent verification of its accuracy before applying it for any purpose.

IF THIS DRAWING DOES NOT MEASURE EXACTLY 30" X 42", IT HAS BEEN REDUCED OR ENLARGED. PLEASE DO NOT SCALE THIS DRAWING.

WTW ARCHITECTS
TIMBER COURT
127 ANDERSON STREET
PITTSBURGH, PA 15212-5801
(412) 321-0550
(412) 321-2431 FAX

ASSOCIATE ARCHITECT:

WBCM, – Architects
Whitney Bailey Cox & Magnani, LLC – Consulting Engineers
849 Fairmount Ave. Suite 100
Baltimore, MD 21286 (410) 512-4500

Henry Adams, LLC.
Consulting Engineers
600 Baltimore Avenue
Baltimore, MD 21204-4079
410.296.6500
Fax 410.296.3156

Mullins Engineering Co.
1257 ANNAPOLIS ROAD,
ODENTON, MD 21113
410-519-0800
FAX: 410-672-3977
MEC PROJECT NO. 0512300

Rev.	Date:	Comment:
20	1/29/10	RECORD DRAWING
19	8/4/09	BULLETIN #120
18	4/29/09	BULLETIN #109
17	4/30/09	BULLETIN #108R
16	3/30/09	BULLETIN #105
15	4/15/09	BULLETIN #99R
14	3/2/09	BULLETIN #94
13	12/16/08	BULLETIN #82
12	12/7/08	BULLETIN #80
11	11/20/08	BULLETIN #78
10	11/19/08	BULLETIN #72 (rev)
9	10/20/08	BULLETIN #69
8	9/4/08	BULLETIN #63
7	7/28/08	BULLETIN #55
6	6/23/08	BULLETIN #51
5	05/23/08	COORD. DWGS RFI 163
4	05/09/08	BULLETIN #31
3	04/14/08	CB-39
2	03/10/08	CBM-2
1	02/18/08	CBM-1
0	05/02/07	For Construction

Issued: May 2, 2007

Campus Center

621 West Lombard Street
University of Maryland,
Baltimore
Baltimore, MD

Shaft Section

100% CONSTRUCTION DOCUMENTS

UMB PROJECT NO. 99-311
WTW PROJECT NO. 70-4091

H3.1

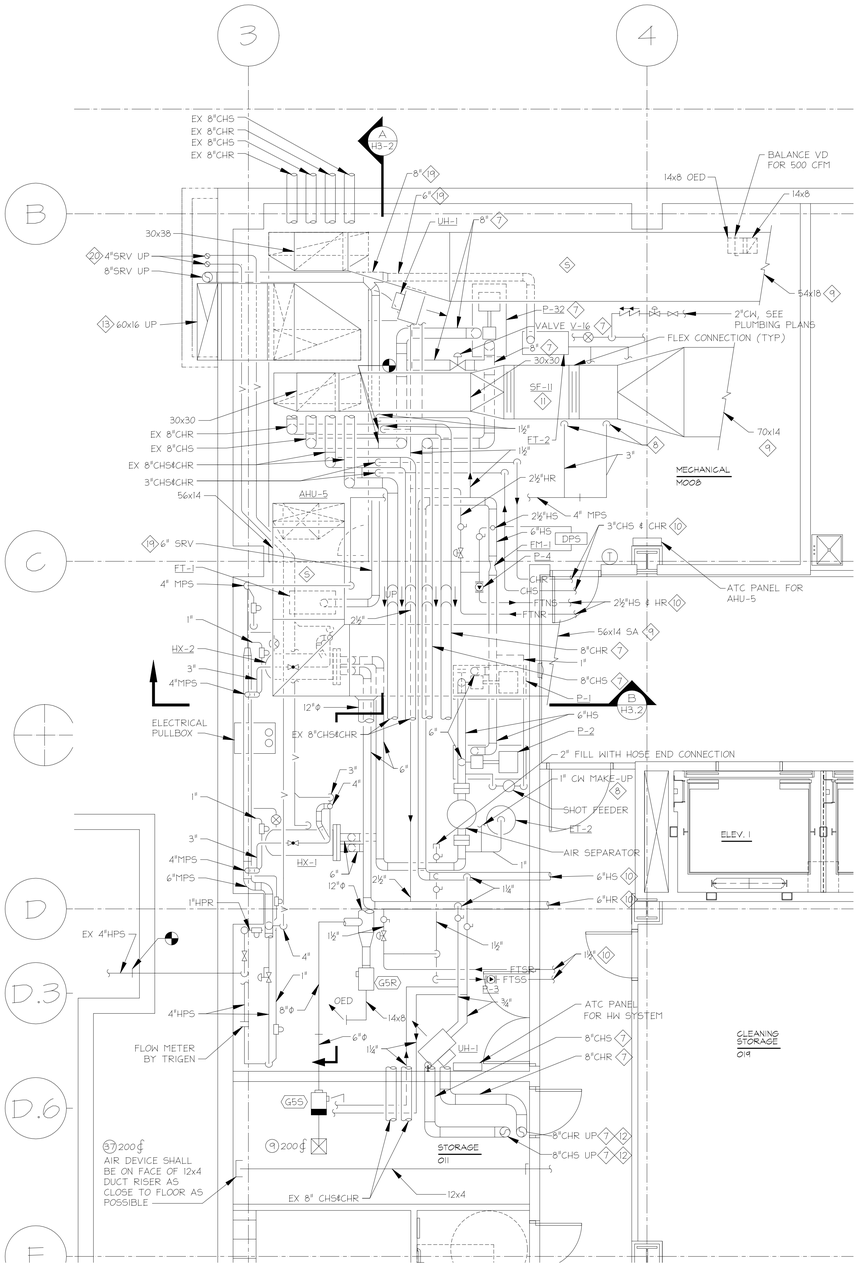

1 MECHANICAL ROOM - GARDEN LEVEL
1/4"=1'-0"

0 2' 4' 8'

N

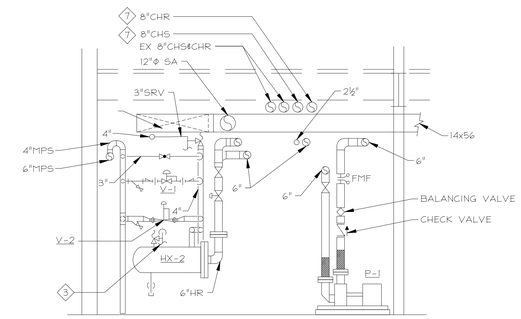

3 SECTION B/3.2
H3-2
1/4"=1'-0"

0 2' 4' 8'

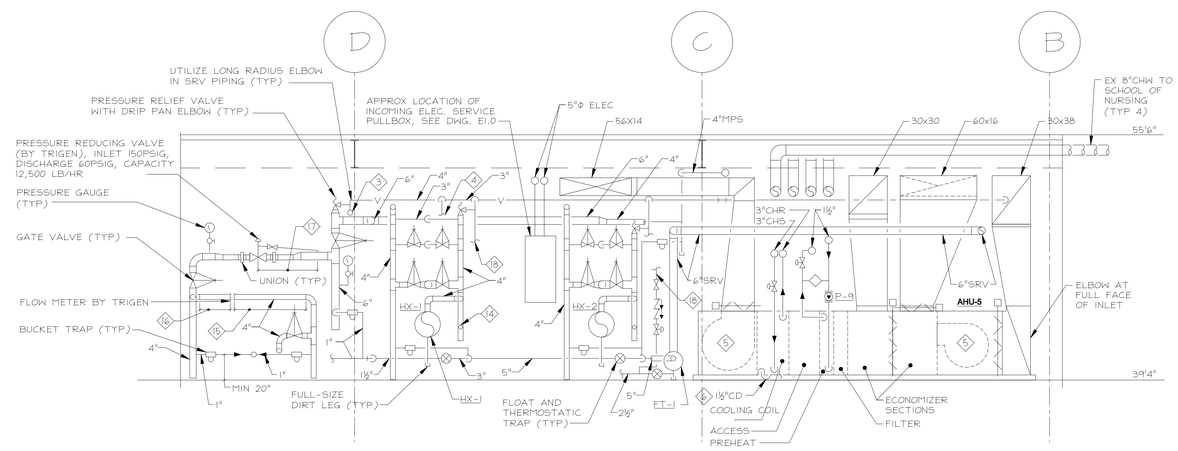

2 SECTION A/3.2
H3-2
1/4"=1'-0"

0 2' 4' 8'

RECORD DRAWING: This record drawing has been prepared based upon information provided by others. While this information is believed to be reliable, the Design Professional has not verified its accuracy, and thus is not responsible for the accuracy or completeness of this record drawing or for any errors or omissions which may have been incorporated into it as a result of erroneous information provided by others. Those relying on this record document are advised to obtain independent verification of its accuracy before applying it for any purpose.

IF THIS DRAWING DOES NOT MEASURE EXACTLY 30" X 42", IT HAS BEEN REDUCED OR ENLARGED. PLEASE DO NOT SCALE THIS DRAWING.

◇ SPECIAL NOTES:

1. 1½"CW MAKE UP.
2. 1¼"HS&HR FOR UNIT HEATER.
3. PIPE FULL SIZE LIQUID DISCHARGE TO FLOOR DRAIN.
4. 3"SRV TO HX-1.
5. FAN SECTION WITH ACCESS DOOR.
6. PIPE TO NEAREST FLOOR DRAIN.
7. PROVIDE UNDER ALT#2.
8. 3"MPS TO DOMESTIC WATER HEATERS DWH-1 AND DWH-2.
9. FOR CONT. SEE DWG.H1.0.
10. FOR CONT. SEE DWG.H2.0.
11. MOTOR ON BOTTOM.
12. FOR CONT. SEE DWG.H2.1.
13. FOR CONT. SEE DWG. H1.1.
14. 1"MPR.
15. MINIMUM 50".
16. MINIMUM 24".
17. MINIMUM 54".
18. 2"CW, SEE PLUMBING PLANS FOR CONT.
19. SLOPE DOWN TOWARDS FLASH TANKS @ ⅛" PER LF.
20. PROVIDE 2" DRAIN AT BOTTOM OF RISER, PIPE TO NEAREST FLOOR DRAIN.

WTW ARCHITECTS
TIMBER COURT
127 ANDERSON STREET
PITTSBURGH, PA 15212-5801
(412) 321-0550
(412) 321-2431 FAX

ASSOCIATE ARCHITECT:

WBCM, – Architects
Whitney Bailey Cox &
Magnani, LLC –
Consulting Engineers
849 Fairmount Ave. Suite 100
Baltimore, MD 21286 (410) 512-4500

Henry Adams, LLC.
Consulting Engineers
600 Baltimore Avenue
Baltimore, MD 21204-4079
410.296.6500
Fax 410.296.3156

Mullins
Engineering Co.
1257 ANNAPOLIS ROAD,
ODENTON, MD 21113
410-519-0800
FAX: 410-672-3977
MEC PROJECT NO. 0512300

Rev.	Date:	Comment:
20	1/29/10	RECORD DRAWING
19	8/4/09	BULLETIN #120
18	4/29/09	BULLETIN #109
17	4/30/09	BULLETIN #108R
16	3/30/09	BULLETIN #105
15	4/15/09	BULLETIN #99R
14	3/2/09	BULLETIN #94
13	12/16/08	BULLETIN #82
12	12/7/08	BULLETIN #80
11	11/20/08	BULLETIN #78
10	11/19/08	BULLETIN #72 (rev)
9	10/20/08	BULLETIN #69
8	9/4/08	BULLETIN #63
7	7/28/08	BULLETIN #55
6	6/23/08	BULLETIN #51
5	05/23/08	COORD. DWGS RFI 163
4	05/09/08	BULLETIN #31
3	04/14/08	CB-39
2	03/10/08	CBM-2
1	02/18/08	CBM-1
0	05/02/07	For Construction

Issued: May 2, 2007

Campus Center

621 West Lombard Street
University of Maryland,
Baltimore
Baltimore, MD

Mech. Room Garden Level

100% CONSTRUCTION DOCUMENTS

UMB PROJECT NO. 99-311
WTW PROJECT NO. 70-4091

H3.2